RJTemp Temperature Probe

- **Temperature Probe for Application in Battery Charging Compensation or measuring in Environment area**
- **1 and 3 m Length**
- **Connection with RJ12 or RJ45**
- **IP65**
- **Easy to apply, with double-sided adhesive**
- **For DC Ups, Battery Charger, DPY351 provided by: Aux1**

Feature

The sensor can be used for the measurement of a battery temperature or the environment area.
The sensor has to be connected to the devices in Aux 1 Input.
The devices thanks the temperature probe, charge the battery with the voltage compensation in depending on the battery temperature monitored.
Connected to DPY351 the sensor may provide the environment temperature that you want control.

Technical Data

Protection Degree (EN/IEC 60529)	IP 65
Protection Class	III
Tolerance	± 0.5 K/25°C
Cable material	PVC
Adhesive: 3M Acrylic Form Tape	4229P
Rubber protection	PVC

Climatic Data

Ambient temperature (operation)	-25 ÷ +70°C
Ambient temperature Storage	-40 ÷ +85°C
Humidity at 25 °C no condensation	95% to 25°C

Temperature Probe

Type	Connector	Description
RJTEMP451	RJ 45	Length 1m. DC-UPS Sizes: 1,2,3
RJTEMP453	RJ 45	Length 3m. DC-UPS Sizes: 1,2,3
RJTEMP451N	RJ 45	Length 1m. DC-UPS Sizes: 5
RJTEMP453N	RJ 45	Length 1m. DC-UPS Sizes: 5
RJTEMP111	RJ 12	Length 1m. DC-UPS Sizes 4; DPY351
RJTEMP113	RJ 12	Length 3m. DC-UPS Sizes 4; DPY351

Norms and Certifications

In Conformity to: 89/336/EEC EMC Directive; 2014/35/UE (Low Voltage); Safety EN IEC 62368-1: 2014/AC:2015; Emission: IEC 61000-6-3; Immunity: IEC 61000-6-2. CE.

Electrical Diagram

Temperature Sensor (inside)	LM234

Drawings

Application Data

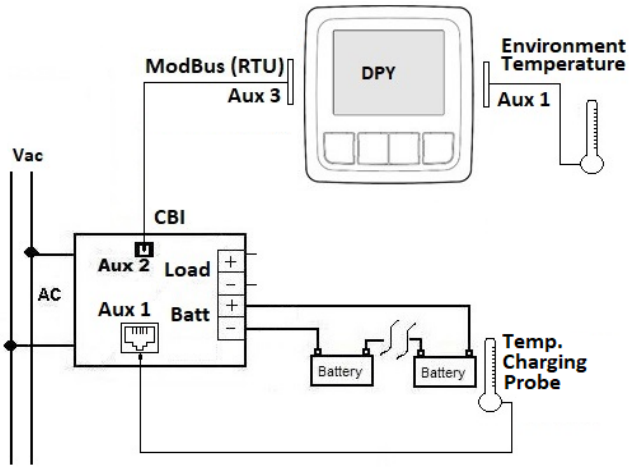

All specifications are subject to change without notice
All Rights Reserved