150W AC/DC Economical Ultra Slim Industrial DIN Rail Power **XDR-150E** series

User's Manual

LISTED UL61010 | BS EN/EN62368-1 BS EN/EN61558-1 BS EN/EN61010-1 | IEC62368-1 IEC61558-1 IEC61010-1 | (Note.8) | IS 13252 (By request Note.9) | KC62368-1 (By request)

CNS15598-1 | GB4943.1 | TPTC004

Automate | Industrial | Security | Network | Telecom

Features

- 85~264Vac input range
- Global certificates in multi-fields (ITE 62368-1,Industrial 61558-1/-2-16,61010)
- 30mm slim width
- High efficiency up to 91% and no load power dissipation 0.6W~1W
- Built-in constant current limiting circuit
- Protections: Short circuit / Overload / Over voltage / Over temperature
- Fanless design, cooling by free air convection
- Over voltage category Ⅲ (OVC Ⅲ)
- -40~+70°C wide range operation temperature (>+50℃ derating)
- Operating altitude up to 5000 meters
- Built-in DC OK relay contact
- Can be installed on DIN rail TS-35/7.5 or 15
- 3 years warranty

Applications

- Industrial control system
- Semiconductor fabrication equipment
- Factory automation
- Electro-mechanical apparatus
- Battery charger

GTIN CODE

MW Search: https://www.meanwell.com/serviceGTIN.aspx

Description

The XDR-150E series is a 150W AC/DC economical ultra slim industrial DIN rail power. Key features of this series include a narrow 30mm casing, optimizing system installation space, and an ultra-wide input range of 85~264Vac suitable for global use. It boasts a maximum efficiency of 91% and a low standby power consumption 0.6W~1W for energy savings and carbon reduction. It has built-in constant current, fanless design, a wide operating temperature range of -40 to +70℃ (up to +50℃ at full load); OVCIII compliance; built-in DC OK signal. With comprehensive protection functions, complete safety certifications, and a 3-years warranty, the XDR-150E series is a compact, high-performance, and highly reliable DIN rail power supply.

Model Encoding

XDR - 150E - 24

- 24 — Output voltage(12V/24V/36V/48V)
- E — Economical version
- 150 — Output wattage
- XDR — Series name

150W AC/DC Economical Ultra Slim Industrial DIN Rail Power **XDR-150E** series

SPECIFICATION		XDR-150E-12	XDR-150E-24	XDR-150E-36	XDR-150E-48
OUTPUT					
DC VOLTAGE		12V	24V	36V	48V
RATED CURRENT	115VAC	10A	5.2A	3.46A	2.6A
	230VAC	11A	6.5A	4.33A	3.25A
CURRENT RANGE	115VAC	0 ~ 10A	0 ~ 5.2A	0 ~ 3.46A	0 ~ 2.6A
	230VAC	0 ~ 11A	0 ~ 6.5A	0 ~ 4.33A	0 ~ 3.25A
RATED POWER	115VAC	120W	124.8W	124.56W	124.8W
	230VAC	132W	156W	155.88W	156W
RIPPLE & NOISE (max.) Note.2		100mVp-p	120mVp-p	150mVp-p	200mVp-p
VOLTAGE ADJ. RANGE		12 ~ 15V	24 ~ 29V	36 ~ 42V	48 ~ 55V
VOLTAGE TOLERANCE Note.3		±2.0%	±1.0%	±1.0%	±1.0%
LINE REGULATION		±0.5%	±0.5%	±0.5%	±0.5%
LOAD REGULATION		±1.0%	±1.0%	±1.0%	±1.0%
SETUP, RISE TIME		1200ms, 60ms/230Vac 2500ms, 60ms/115Vac at full load			
HOLD UP TIME (Typ.)		16ms/230Vac 8ms/115Vac at full load			
INPUT					
AC VOLTAGE RANGE		85 ~ 264Vac			
DC VOLTAGE RANGE		120 ~ 370Vdc			
NO LOAD POWER CONSUMPTION (Typ.)		0.6W @115Vac 0.9W @ 230Vac	0.8W @115Vac 1W @ 230Vac		
FREQUENCY RANGE		47 ~ 63Hz			
EFFICIENCY (Typ.)		89%	91%	91%	91%
AC CURRENT (Typ.)		2.6A/115Vac 1.6A/230Vac			
INRUSH CURRENT (Typ.)		COLD START 20A/115Vac 40A/230Vac			
LEAKAGE CURRENT		<1mA / 240Vac			
PROTECTION					
OVERLOAD		105~130% rated output power ,constant current limiting without shutdown, recovers automatically after fault condition is removed /230Vac 105~150% rated output power ,constant current limiting without shutdown, recovers automatically after fault condition is removed/115Vac			
OVER VOLTAGE		15 ~ 18V	30 ~ 34V	43 ~ 50V	56 ~ 65V
		Protection type : Shut down o/p voltage, re-power on to recover			
OVER TEMPERATURE		Protection type : Shut down o/p voltage,recovers automatically after fault condition is removed			
FUNCTION					
DC OK RELAY CONTACT		Relay Contact Ratings (max.):30Vdc/1A, 30Vac/0.5A resistive load			
ENVIRONMENT					
WORKING TEMP. Note.4		-40 ~ +70℃ (Refer to "Derating Curve")			
WORKING HUMIDITY		20 ~ 95% RH non-condensing			
STORAGE TEMP., HUMIDITY		-40 ~ +85℃, 10 ~ 95% RH non-condensing			
TEMP. COEFFICIENT		±0.03% /℃ (0 ~ 50℃)			
VIBRATION		Component:10 ~ 500Hz, 2G 10min./1cycle, 60min. each along X, Y, Z axes; Mounting: Compliance to IEC60068-2-6			

SPECIFICATION	XDR-150E-12	XDR-150E-24	XDR-150E-36	XDR-150E-48
SAFETY & EMC Note.7&8&9				
SAFETY STANDARDS	CB IEC 62368-1, IEC 61558-1/2-16, IEC 61010-1/-2-201 TUV BS EN/EN 62368-1, BS EN /EN 61558-1/-2-16, BS EN/EN 61010-1/-2-201 UL UL/CUL 61010-1/-2-201 CCC GB4943.1 BSMI CNS15598-1 EAC TPTC004 approved KC/BIS KC 62368-1 and BIS IS 13252 (Part 1) certified, no stock by request ,contact sales for inquires			
OVER VOLTAGE CATEGORY Note.5	IEC/EN 61558-1/-2-16 (OVC Ⅲ, altitude up to 2000m) IEC/EN/UL 61010-1/-2-201 (OVC Ⅱ, altitude up to 5000m) IEC/EN 62368-1 (OVC Ⅱ, altitude up to 5000m)			
SAFETY EXTRA-LOW VOLTAGE(SELV)	IEC/EN 61558-2-16 (SELV) IEC/EN 62368-1 (SELV / ES1)			
WITHSTAND VOLTAGE	I/P-O/P: 4KVac I/P-FG: 2KVac O/P-FG: 1.5KVac O/P-DC OK: 0.5KVac			
ISOLATION RESISTANCE	I/P-O/P, I/P-FG, O/P-FG: 100M Ohms/500Vdc/25℃/ 70%RH			
EMC EMISSION	**Parameter**	**Standard**	**Test Level / Note**	
	Conducted	BS EN/EN55032 (CISPR32) / BS EN/EN61204-3 / CNS15936 / KS C 9832	Class B	
	Radiated	BS EN/EN55032 (CISPR32) / BS EN/EN61204-3 / CNS15936 / KS C 9832	Class B	
	Harmonic Current	BS EN/EN61000-3-2	Class A(≤80% LOAD)	
	Voltage Flicker	BS EN/EN61000-3-3	-----	
EMC IMMUNITY	BS EN/EN55035 , BS EN/EN61204-3, BS EN/EN61000-6-2(BS EN/EN50082-2), KS C 9835			
	Parameter	**Standard**	**Test Level / Note**	
	ESD	BS EN/EN61000-4-2	Level 3, 8KV air ; Level 2, 4KV contact; criteria A	
	Radiated	BS EN/EN61000-4-3	Level 3, 10V/m ; criteria A	
	EFT / Burst	BS EN/EN61000-4-4	Level 3, 2KV ; criteria A	
	Surge	BS EN/EN61000-4-5	Level 4, 2KV/Line-Line ;Level 4, 4KV/Line-Line-Chassis ;criteria A	
	Conducted	BS EN/EN61000-4-6	Level 3, 10V ; criteria A	
	Magnetic Field	BS EN/EN61000-4-8	Level 4, 30A/m ; criteria A	
OTHERS				
MTBF	2201.7K hrs min. Telcordia SR-332 (Bellcore) ; 440.4K hrs min. MIL-HDBK-217F (25℃)			
DIMENSION	**30*125.2*116mm (W*H*D)**			
PACKING	510g; 24pcs/13.25Kg/1.16CUFT			

NOTE

1. All parameters NOT specially mentioned are measured at 230Vac input, rated load and 25℃ of ambient temperature.
2. Ripple & noise are measured at 20MHz of bandwidth by using a 12" twisted pair-wire terminated with a 0.1 μF & 47 μF parallel capacitor.
3. Tolerance : includes set up tolerance, line regulation and load regulation.
4. When the temperature is between -40 ° C and -20 ° C and the input voltage is between 85V and 90V, the temperature derating curve drops to 40% .
5. The ambient temperature derating of 3.5℃/1000m with fanless models and of 5℃/1000m with fan models for operating altitude higher than 2000m(6500ft).
6. Installation clearances : 40mm on top, 20mm on the bottom, 5mm on the left and right side are recommended when loaded permanently with full power.
   In case the adjacent device is a heat source, 15mm clearance is recommended.
7. The power supply is considered a component which will be installed into a final equipment. The final equipment must be re-confirmed that it still meets EMC directives. (as available on https://www.meanwell.com//Upload/PDF/EMI_statement_en.pdf)
8. The Regulatory Compliance Mark (RCM) is applied on a voluntary basis. The equipment meets the relevant IEC or AS/NZS standards, or AS/NZS 3820 where applicable. The use of the RCM mark complies with AS/NZS 4417.1.
9. Some factory or model may not have the BIS logo, please contact your MEAN WELL sales for more information.

※ Product Liability Disclaimer：For detailed information, please refer to https://www.meanwell.com/serviceDisclaimer.aspx

■ Block Diagram

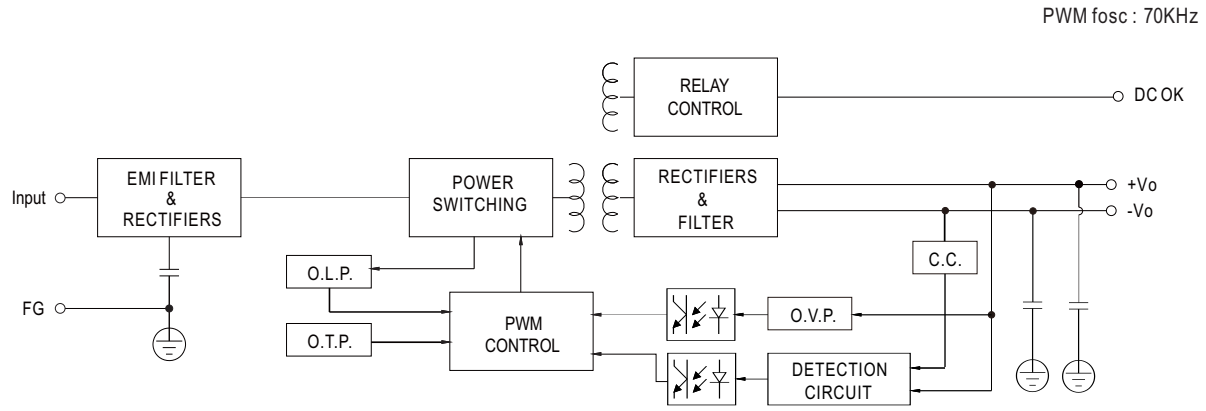

■ Derating Curve

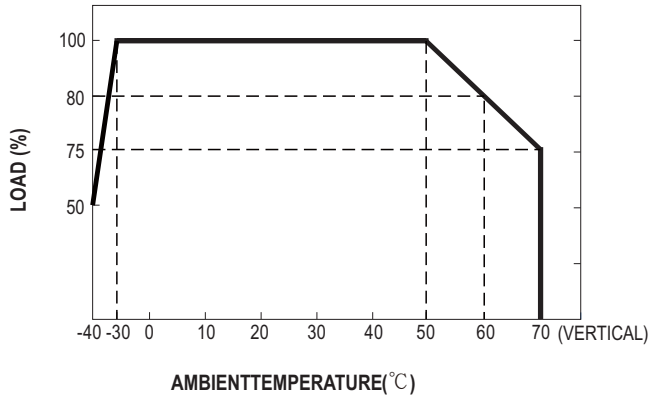

■ Static Characteristics

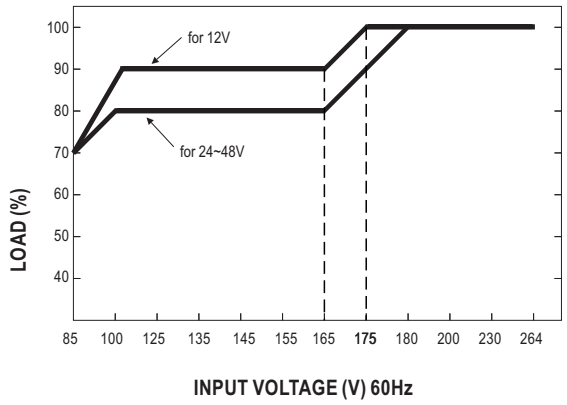

■ Function Manual

1.DC OK Relay Contact

Contact Close	PSU turns ON / DC OK.
Contact Open	PSU turns OFF / DC Fail.
Contact Ratings (max.)	30Vdc/1A, 30Vac/0.5A resistive load.

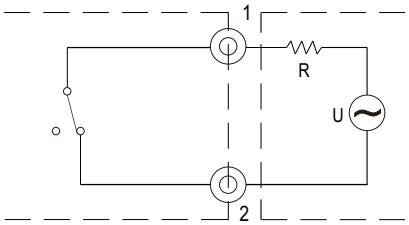

External voltage source (U) and resistor (R)
(The max. Sink is 30Vdc/1A ,30Vac/0.5A)

Internal circuit of DC_OK, via relay contact

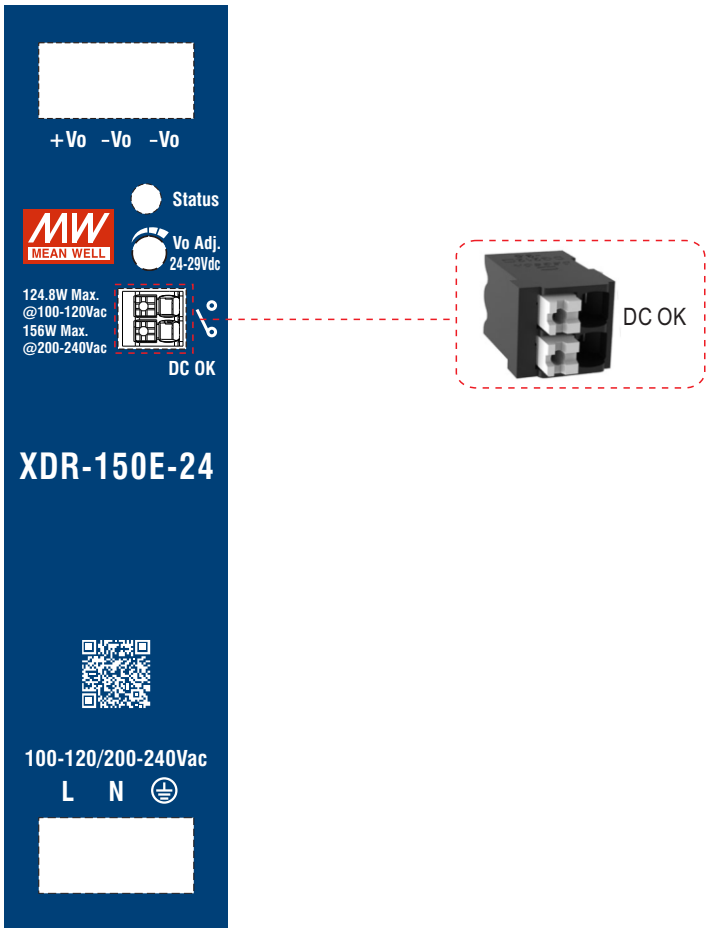

■ Mechanical Specification

(Unit:mm , Tolerance ±1mm)

Case No.301

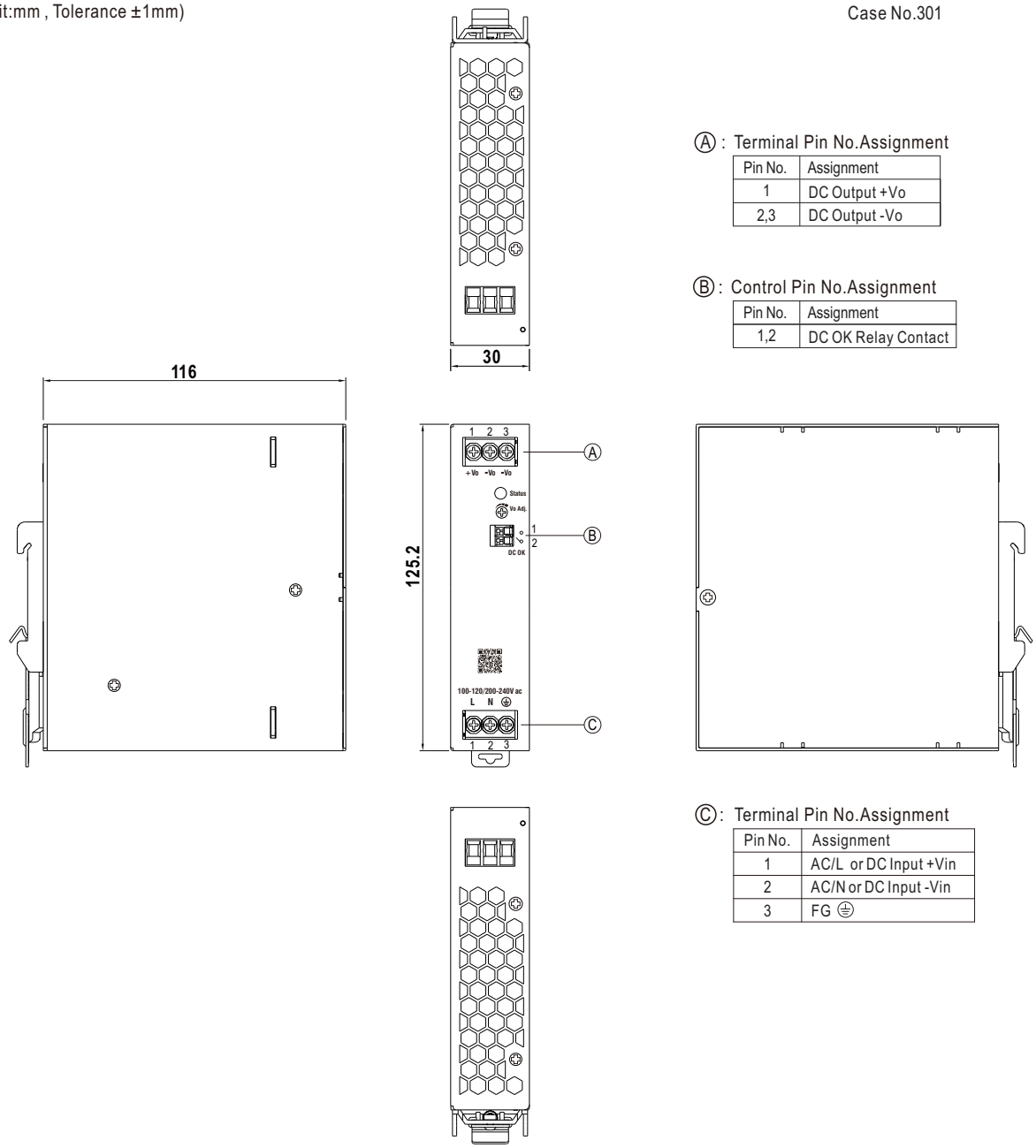

Ⓐ : Terminal Pin No.Assignment

Pin No.	Assignment
1	DC Output +Vo
2,3	DC Output -Vo

Ⓑ : Control Pin No.Assignment

Pin No.	Assignment
1,2	DC OK Relay Contact

Ⓒ : Terminal Pin No.Assignment

Pin No.	Assignment
1	AC/L or DC Input +Vin
2	AC/N or DC Input -Vin
3	FG ⏚

■ Recommend Wiring

	AC Input T.B	DC Output T.B	Signal connector
Solid Wire	$6mm^2$ max.	$6mm^2$ max.	$1.5mm^2$ max.
A.W.G	20~10 AWG	16~10 AWG	24~16 AWG
Wire Stripping Length	7~8mm	7~8mm	8~9mm
Screw Terminal Torque	5 Lb-In	5 Lb-In	/

Installation Instruction

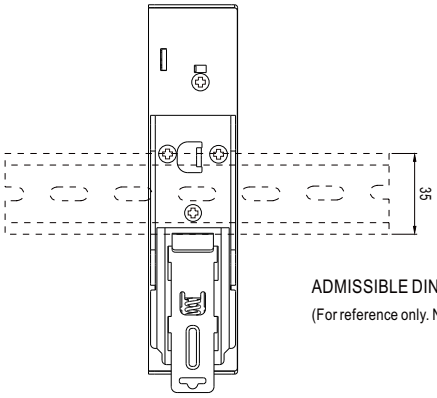

ADMISSIBLE DIN-RAIL:TS35/7.5 OR TS35/15
(For reference only. Not included with unit.)

This series fits DIN rail TS35/7.5 or TS35/15.
For installation details, please refer to the Instruction manual.

Installation Manual

Please refer to : http://www.meanwell.com/manual.html