RSP-1600 series

1600W Power Supply with Single Output

Dimension

L	*	W	*	H		
300	*	85	*	41	(1U)	mm
11.8	*	3.35	*	1.61	(1U)	inch

Front

User's Manual

Click Me

Back

PMBus Power Management. Defined.

Parallel PFC R33100 RoHS UL62368-1 BS EN/EN62368-1 TPTC004 IEC62368-1

Industrial Automate Telecom Network EV

Features

- Universal AC input / Full range
  (Withstand 300VAC surge input for 5 seconds)
- Built-in active PFC function
- High efficiency up to 93%
- Forced air cooling by built-in DC fan
- Output voltage and constant current level programmable
- Active current sharing up to 9600W (5+1)
- Built-in remote ON-OFF control / remote sense / auxiliary power / DC OK signal / OTP alarm signal
- Protections: Short circuit / Overload / Over voltage / Over temperature
- Optional PMBus or CANBus protocol
- 5 years warranty

Applications

- Factory control or automation apparatus
- Test and measurement instrument
- Laser related machine
- Aging facility
- Digital broadcasting
- Constant current source
- Redundant system

GTIN CODE

MW Search: https://www.meanwell.com/serviceGTIN.aspx

Description

RSP-1600 is a 1.6KW single output enclosed type AC/DC power supply with a 1U low profile and a high power density up to 25W/inch³. This series operates for 90~264VAC input voltage and offers the models with the DC output mostly demanded from the industry. Each model is cooled by the thermostatically controlled fan. Moreover, RSP-1600 provides vast design flexibility by equipping various built-in functions such as the output programming, active current sharing, remote ON-OFF control, auxiliary power, etc.

Model Encoding / Order Information

RSP - 1600 - 48 [ ]

- Communication protocol option
- Output voltage (12V/24V/27V/36V/48V)
- Output wattage
- Series name

Type	Communication Protocol	Note
Blank	None	In Stock
PM	PMBus protocol	By request
CAN	CANBus protocol	By request

SPECIFICATION

MODEL		RSP-1600-12	RSP-1600-24	RSP-1600-27	RSP-1600-36	RSP-1600-48
OUTPUT	DC VOLTAGE	12V	24V	27V	36V	48V
	RATED CURRENT	125A	67A	59A	44.5A	33.5A
	CURRENT RANGE	0 ~ 125A	0 ~ 67A	0 ~ 59A	0 ~ 44.5A	0 ~ 33.5A
	RATED POWER	1500W	1608W	1593W	1602W	1608W
	RIPPLE & NOISE (max.) Note.2	150mVp-p	200mVp-p	200mVp-p	250mVp-p	300mVp-p
	VOLTAGE ADJ. RANGE	11.5 ~ 15V	23.5 ~ 30V	26.5 ~ 33.5V	35.5 ~ 45V	47.5 ~ 58.8V
	VOLTAGE TOLERANCE Note.4	±1.0%	±1.0%	±1.0%	±1.0%	±1.0%
	LINE REGULATION	±0.5%	±0.5%	±0.5%	±0.5%	±0.5%
	LOAD REGULATION	±0.5%	±0.5%	±0.5%	±0.5%	±0.5%
	SETUP, RISE TIME	1500ms, 60ms/230VAC at full load				
	HOLD UP TIME (Typ.)	16ms / 230VAC at 75% load 10ms / 230VAC at full load				
INPUT	VOLTAGE RANGE Note.5	90 ~ 264VAC 250 ~ 370VDC				
	FREQUENCY RANGE	47 ~ 63Hz				
	POWER FACTOR (Typ.)	0.97/230VAC at full load				
	EFFICIENCY (Typ.)	89%	91.5%	92%	92%	93%
	AC CURRENT (Typ.) Note.5	14A/115VAC 8A/230VAC	15A/115VAC 8.5A/230VAC			
	INRUSH CURRENT (Typ.)	COLD START 35A/230VAC				
	LEAKAGE CURRENT	<2mA / 230VAC				
PROTECTION	OVERLOAD	105 ~ 115% rated current				
		Protection type : Constant current limiting, shut down O/P voltage after 5 sec. After O/P voltage falls, re-power on to recover				
	OVER VOLTAGE	15.75 ~ 18.75V	31.5 ~ 37.5V	35.2 ~ 41.9V	47.2 ~ 56.3V	63 ~ 75V
		Protection type : Shut down o/p voltage, re-power on to recover				
	OVER TEMPERATURE	Protection type : Shut down o/p voltage, recovers automatically after temperature goes down				
FUNCTION	OUTPUT VOLTAGE PROGRAMMABLE(PV) Note 6	Adjustment of output voltage is allowable to 40 ~ 125% of nominal output voltage (60 ~ 125% for 12V). Please refer to the Function Manual.				
	OUTPUT CURRENT PROGRAMMABLE(PC) Note 6	Adjustment of constant current level is allowable to 20 ~ 100% of rated current. Please refer to the Function Manual.				
	AUXILIARY POWER	5V @ 0.3A, 12V @ 0.8A				
	REMOTE ON-OFF CONTROL	By electrical signal or dry contact Power ON:short Power OFF:open. Please refer to the Function Manual				
	REMOTE SENSE	Compensate voltage drop on the load wiring up to 0.5V. Please refer to the Function Manual				
	ALARM SIGNAL	Isolated signal output for T-alarm and DC OK				
ENVIRONMENT	WORKING TEMP.	-30 ~ +70℃ (Refer to "Derating Curve")				
	WORKING HUMIDITY	20 ~ 90% RH non-condensing				
	STORAGE TEMP., HUMIDITY	-40 ~ +85℃, 10 ~ 95% RH non-condensing				
	TEMP. COEFFICIENT	±0.03%/℃ (0 ~ 50℃)				
	VIBRATION	10 ~ 500Hz, 2G 10min./1cycle, 60min. each along X, Y, Z axes				
SAFETY & EMC (Note 8)	SAFETY STANDARDS	UL62368-1, CAN/CSA C22.2 No. 62368-1, TUV BS EN/EN62368-1, BSMI CNS15598-1, AS/NZS62368.1, EAC TP TC 004 approved				
	WITHSTAND VOLTAGE	I/P-O/P:3KVAC I/P-FG:2KVAC O/P-FG:1.5KVAC				
	ISOLATION RESISTANCE	I/P-O/P, I/P-FG, O/P-FG:100M Ohms / 500VDC / 25℃/ 70% RH				
	EMC EMISSION	**Parameter**	**Standard**	**Test Level / Note**		
		Conducted	BS EN/EN55032 (CISPR32), CNS15936	Class B		
		Radiated	BS EN/EN55032 (CISPR32), CNS15936	Class A		
		Harmonic Current	BS EN/EN61000-3-2	Class A		
		Voltage Flicker	BS EN/EN61000-3-3	-----		
	EMC IMMUNITY	BS EN/EN55035, BS EN/EN61000-6-2, BSMI CNS13438				
		Parameter	**Standard**	**Test Level / Note**		
		ESD	BS EN/EN61000-4-2	Level 3, 8KV air ; Level 2, 4KV contact		
		Radiated	BS EN/EN61000-4-3	Level 3		
		EFT / Burst	BS EN/EN61000-4-4	Level 3		
		Surge	BS EN/EN61000-4-5	Level 4, 2KV/Line-Line 4KV/Line-Earth		
		Conducted	BS EN/EN61000-4-6	Level 3		
		Magnetic Field	BS EN/EN61000-4-8	Level 4		
		Voltage Dips and Interruptions	BS EN/EN61000-4-11	>95% dip 0.5 periods, 30% dip 25 periods, >95% interruptions 250 periods		
OTHERS	MTBF	478.8K hrs min. Telcordia SR-332 (Bellcore) ; 42.1K hrs min. MIL-HDBK-217F (25℃)				
	DIMENSION	300*85*41mm (L*W*H)				
	PACKING	2.1Kg;6pcs/13.6Kg/1.25CUFT				

NOTE

1. All parameters NOT specially mentioned are measured at 230VAC input, rated load and 25℃ of ambient temperature.
2. Ripple & noise are measured at 20MHz of bandwidth by using a 12" twisted pair-wire terminated with a 0.1uf & 47uf parallel capacitor.
3. Under parallel operation ripple of the output voltage may be higher than the SPEC at light load condition. It will go back to normal ripple level once the output load is more than 5%.
4. Tolerance : includes set up tolerance, line regulation and load regulation.
5. Derating may be needed under low input voltages. Please check the derating curve for more details.
6. PV/PC functions when users are not operating on PMBus/CANBus. SVR functions when users are neither operating on PMBus/CANBus nor using PV/PC.
7. Output will shut down after O/P voltage is below < 80% of Vset for 5 sec, re-power on to recover.
8. The power supply is considered a component which will be installed into a final equipment. All the EMC tests are been executed by mounting the unit on a 720mm*360mm metal plate with 1mm of thickness. The final equipment must be re-confirmed that it still meets EMC directives. For guidance on how to perform these EMC tests, please refer to "EMI testing of component power supplies." (as available on https://www.meanwell.com//Upload/PDF/EMI_statement_en.pdf)
9. The ambient temperature derating of 3.5℃/1000m with fanless models and of 5℃/1000m with fan models for operating altitude higher than 2000m(6500ft).

※ Product Liability Disclaimer : For detailed information, please refer to https://www.meanwell.com/serviceDisclaimer.aspx

Block Diagram

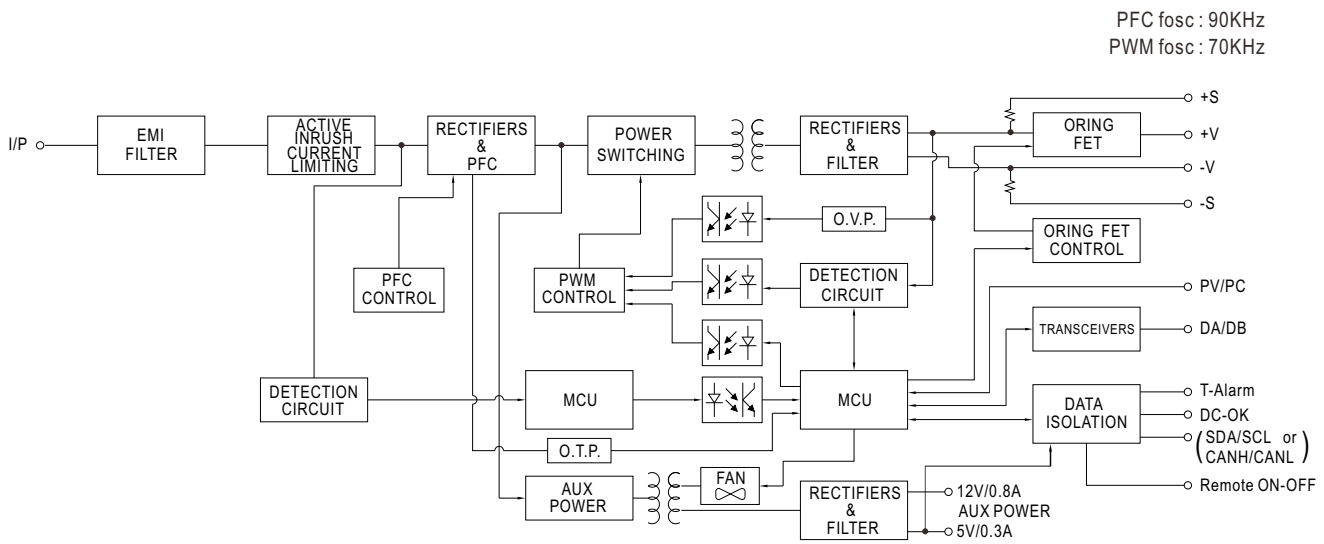

Static Characteristics

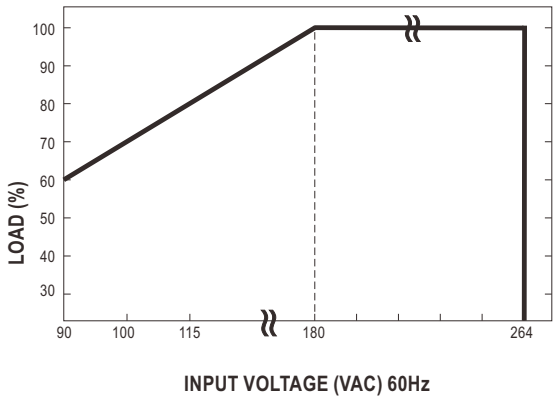

INPUT \ MODEL	12V	24V	27V	36V	48V
180~264VAC	1500W 125A	1608W 67A	1593W 59A	1602W 44.5A	1608W 33.5A
115VAC	1200W 100A	1286.4W 53.6A	1274.4W 47.2A	1281.6W 35.6A	1286.4W 26.8A
100VAC	1050W 87.5A	1125.6W 46.9A	1115.1W 41.3A	1121.4W 31.15A	1125.6W 23.45A
90VAC	900W 75A	964.8W 40.2A	955.8W 35.4A	961.2W 26.7A	964.8W 20.1A

Derating Curve

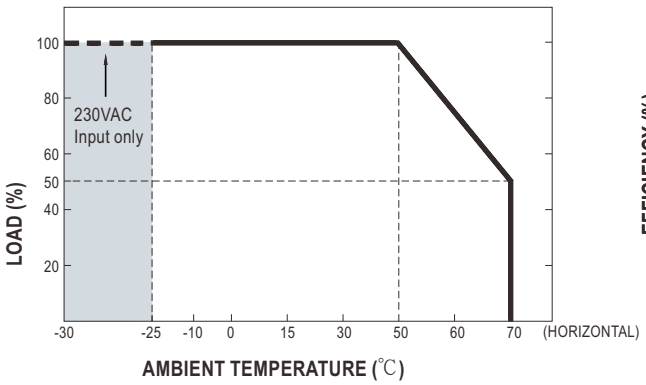

Efficiency vs Load (48V Model)

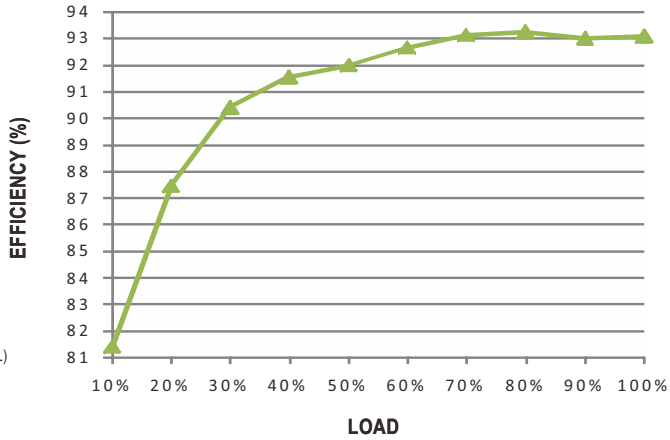

◎ The curve above is measured at 230VAC.

■ Function Manual

1. Voltage Drop Compensation

1.1 Remote Sense

※ The Remote Sense compensates voltage drop on the load wiring up to 0.5V

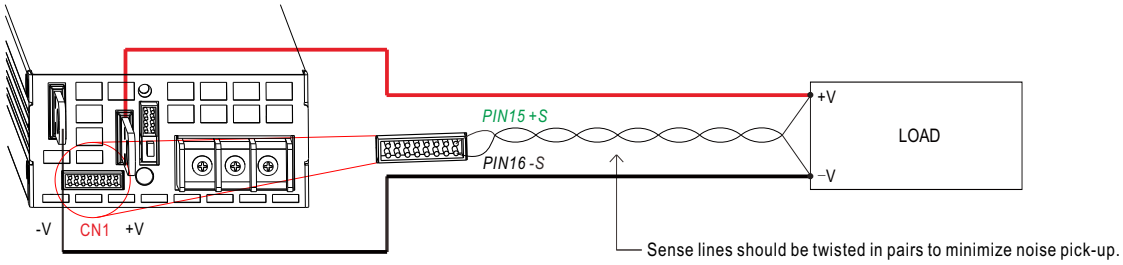

◎ The +S signal should be connected to the positive terminal of the load whereas -S signal to the negative terminal.

1.2 Local Sense

※ The +S,-S have to be connected to the +V(signal), -V(signal), respectively, as the following diagram, in order to get the correct output voltage if Remote Sense is not used.

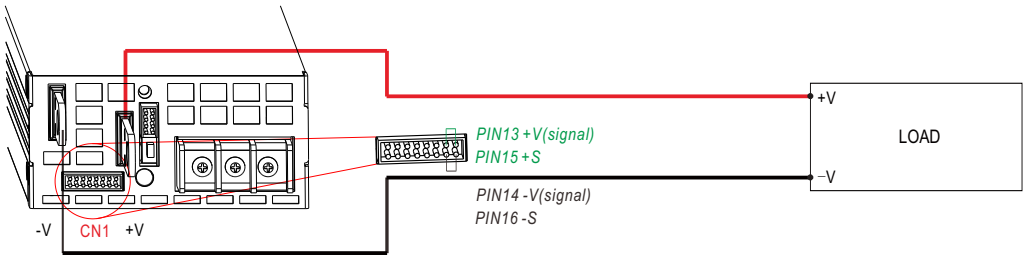

2. Output Voltage Programming (or, PV / remote voltage programming / remote adjust / margin programming / dynamic voltage trim)

※ In addition to the adjustment via the built-in potentiometer, the output voltage can be trimmed by applying EXTERNAL VOLTAGE.

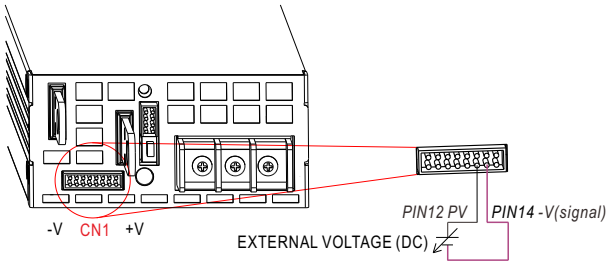

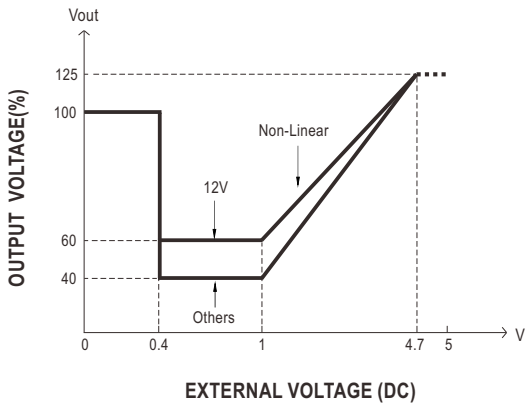

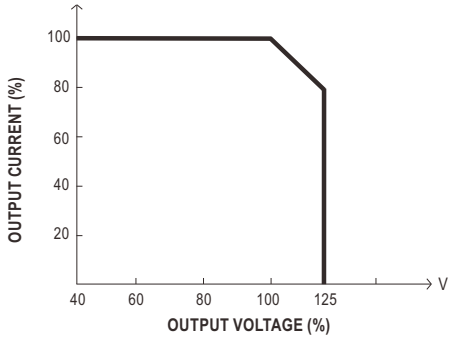

◎ The rated current should change with the Output Voltage Programming accordingly.

◎ For Remote Sense / Local Sense, please refer to "Voltage Drop Compensation" section.

3. Constant Current Level Programming (or, PC / remote current programming / dynamic current trim)

※ The constant current level can be trimmed to 20~100% of the rated current by applying EXTERNAL VOLTAGE.

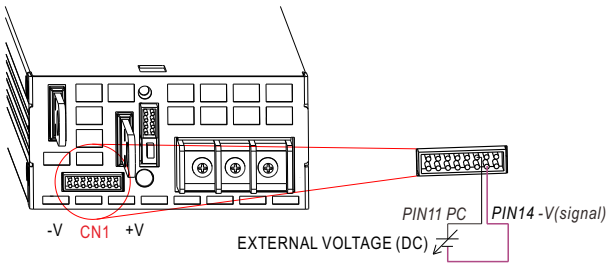

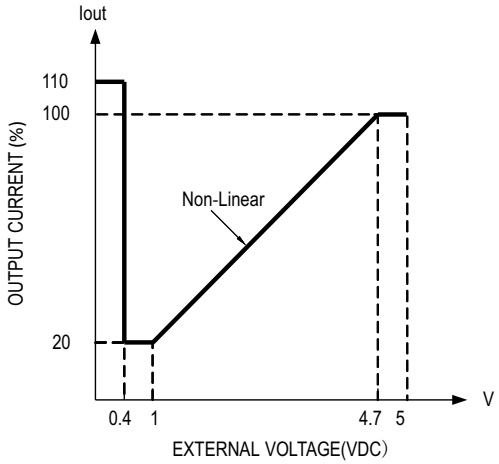

◎ For Remote Sense / Local Sense, please refer to "Voltage Drop Compensation" section.

◎ Output will shut down after O/P voltage is below < 80% of Vset for 5 sec, re-power on to recover.

4. Remote ON-OFF Control

※ The power supply can be turned ON/OFF individually or along with other units by using the "Remote ON-OFF" function.

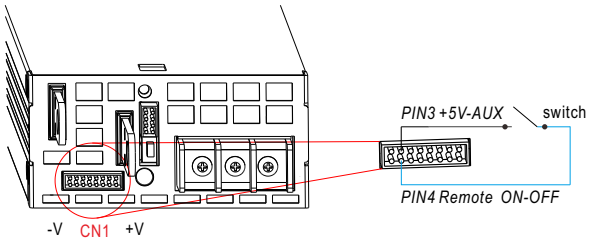

Between Remote ON-OFF and +5V-AUX	Power Supply Status
Switch Short	ON
Switch Open	OFF

5. Alarm Signal Output

※ There are 2 alarm signals, DC OK and T-ALARM, in TTL signal form, on CN1. These signals are isolated from output. The maximum sink current is 10mA.

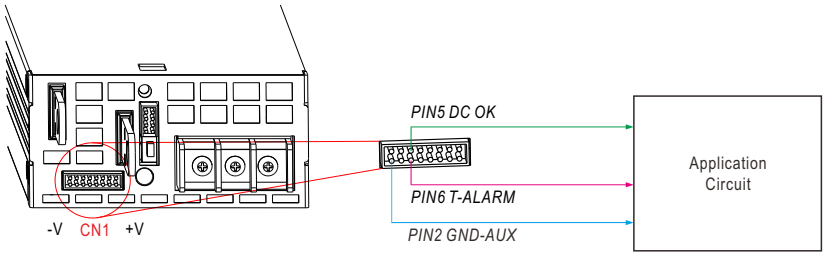

6.Current Sharing with Remote Sense

RSP-1600 has the built-in active current sharing function and can be connected in parallel, up to 6 units, to provide higher output power as exhibited below :

※ The power supplies should be paralleled using short and large diameter wiring and then connected to the load.

※ Difference of output voltages among parallel units should be less than 0.2V.

※ The total output current must not exceed the value determined by the following equation:
Maximum output current at parallel operation=(Rated current per unit)×(Number of unit)×0.9

※ When the total output current is less than 5% of the total rated current, or say (5% of Rated current per unit)×(Number of unit) the current shared among units may not be balanced.

※ Under parallel operation ripple of the output voltage may be higher than the SPEC at light load condition. It will go back to normal ripple level once the output load is more than 5%.

※ CN500/SW1 Function pin connection

Parallel	PSU1		PSU2		PSU3		PSU4		PSU5		PSU6	
	CN500	SW1	CN500	SW1	CN500	SW1	CN500	SW1	CN500	SW1	CN500	SW1
1 unit	X	ON	—	—	—	—	—	—	—	—	—	—
2 unit	V	ON	V	ON	—	—	—	—	—	—	—	—
3 unit	V	ON	V	OFF	V	ON	—	—	—	—	—	—
4 unit	V	ON	V	OFF	V	OFF	V	ON	—	—	—	—
5 unit	V	ON	V	OFF	V	OFF	V	OFF	V	ON	—	—
6 unit	V	ON	V	OFF	V	OFF	V	OFF	V	OFF	V	ON

(V : CN500 connected ; X : CN500 not connected.)

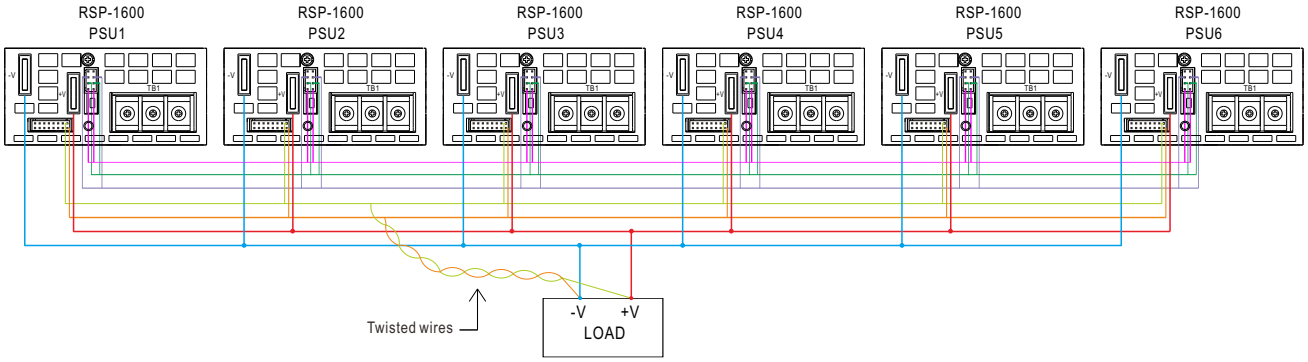

Fig 5.1

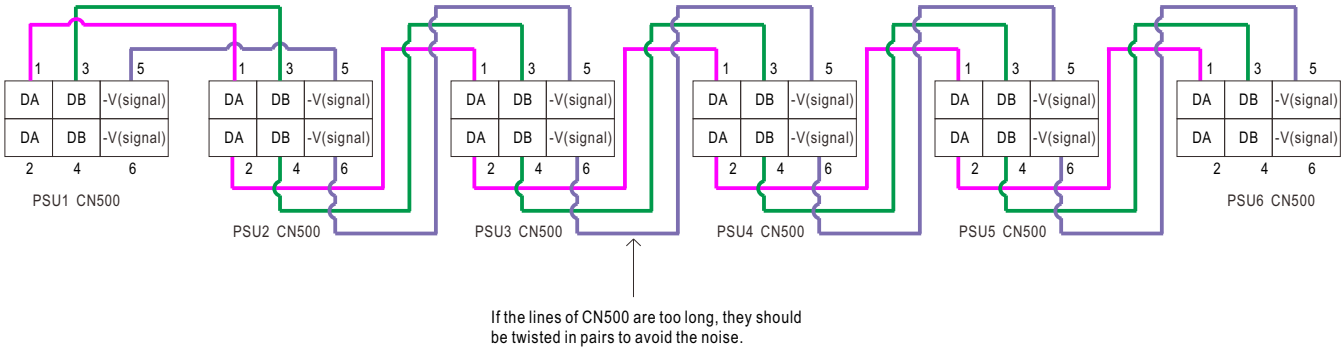

◎ DA,DB and -V(signal) are connected mutually in parallel.

◎ For Remote Sense / Local Sense, please refer to "Voltage Drop Compensation" section.

■ Mechanical Specification

(Unit: mm , tolerance ±0.5mm)

Case No.250

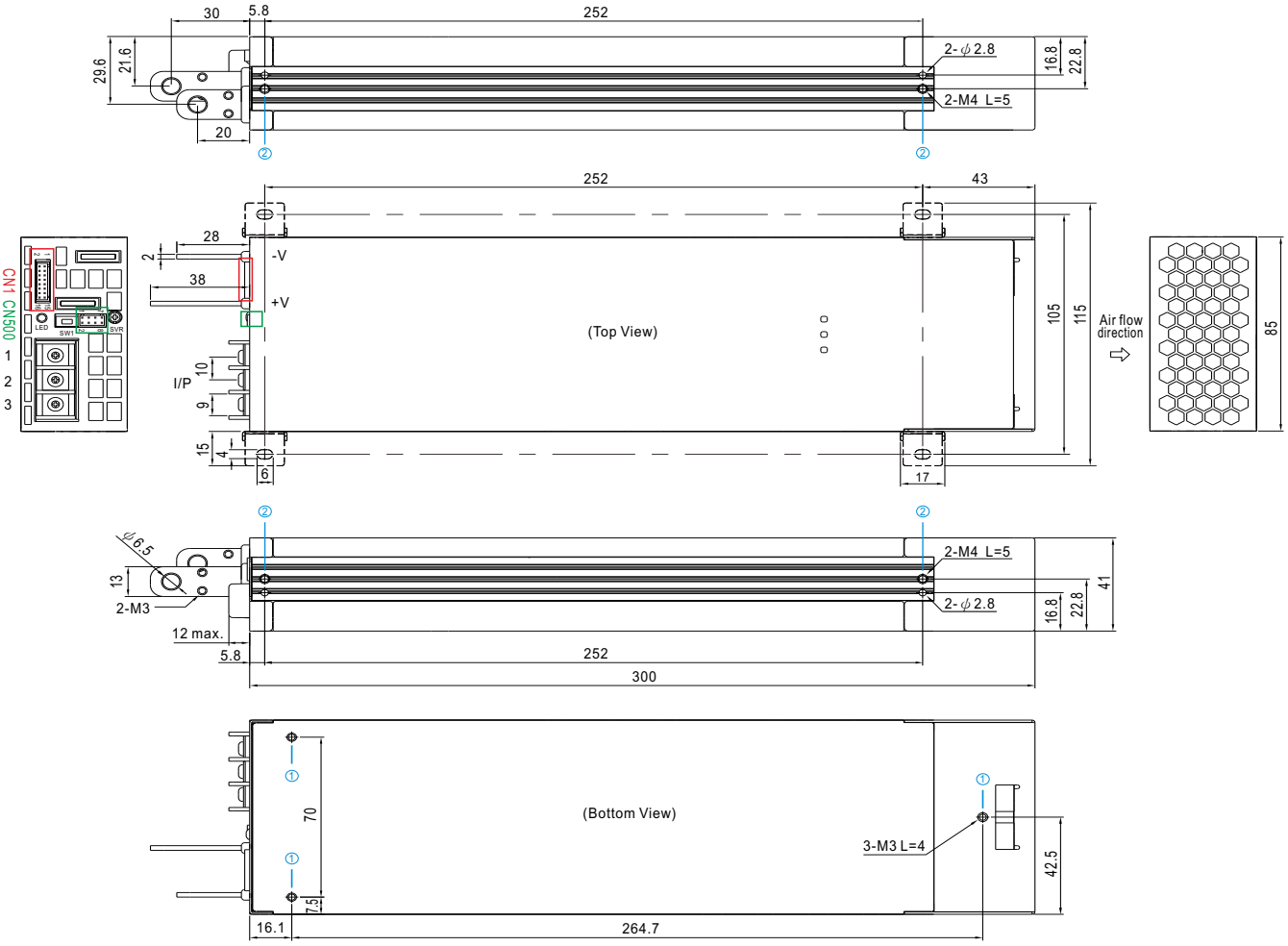

※ Mounting Instruction

Hole No.	Recommended Screw Size	MAX. Penetration Depth L	Recommended mounting torque
①	M3	4mm	6~8Kgf-cm
②	M4	5mm	7~10Kgf-cm

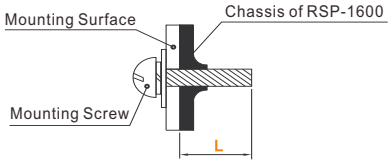

※ Control Pin No. Assignment(CN1) : HRS DF11-16DP-2DS or equivalent

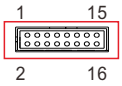

Mating Housing	HRS DF11-16DS or equivalent
Terminal	HRS DF11-**SC or equivalent

Pin No.	Function	Description
1	+12V-AUX	Auxiliary voltage output, 10.6~13.2V, referenced to GND-AUX (pin2). The maximum load current is 0.8A. This output has the built-in "Oring diodes" and is not controlled by "Remote ON-OFF".
2	GND-AUX	Auxiliary voltage output GND. The signal return is isolated from the output terminals (+V & -V).
3	+5V-AUX	Auxiliary voltage output, 4.5~5.5V, referenced to GND-AUX (pin2). The maximum load current is 0.3A. This output has the built-in "Oring diodes" and is not controlled by "Remote ON-OFF
4	Remote ON-OFF	The unit can turn the output ON/OFF by electrical signal or dry contact between *Remote ON/OFF* and *+5V-AUX*. (Note.2) Short (4.5 ~ 5.5V) : Power ON ; Open (-0.5 ~ 0.5V) : Power OFF ; The maximum input voltage is 5.5V.
5	$\overline{\text{DC-OK}}$	High (3.5 ~ 5.5V) : When the Vout ≦77%±5%. Low (-0.5 ~ 0.5V) : When Vout ≧80%±5%. The maximum sourcing current is 10mA and only for output. (Note.2)
6	T-ALARM	High (3.5 ~ 5.5V) : When the internal temperature exceeds the limit of temperature alarm, or when Fan fails. Low (-0.5 ~ 0.5V) : When the internal temperature is normal, and when Fan normally works. The maximum sourcing current is 10mA and only for output(Note.2)
7,8,9	NC	For standard model: Retain for future use.
	A0,A1,A2	For PMBus / CANBus model: PMBus / CANBus interface address lines. (Note.1)
10	NC	Retain for future use.
11	PC	Connection for constant current level programming. (Note.1)
12	PV	Connection for output voltage programming. (Note.1)
13	+V (Signal)	Positive output voltage signal. It is for local sense; it cannot be connected directly to the load.
14	-V (Signal)	Negative output voltage signal. It is for local sense and certain function reference; it cannot be connected directly to the load.
15	+S	Positive sensing for remote sense.
16	-S	Negative sensing for remote sense.

Note.1: Non-isolated signal, referenced to [-V(signal)].
Note.2: Isolated signal, referenced to GND-AUX.

※ LED Status Indicators

LED	Description
Green	The power supply functions normally.
Red	Abnormal status (Over temperature protection, Overload protection, Fan fail.)

※ AC Input Terminal Pin No. Assignment

Pin No.	Assignment	Diagram	Maximum mounting torque
1	FG ⏚		8Kgf-cm
2	AC/N		
3	AC/L		

※ Control Pin No. Assignment(CN500) : HRS DF11-8DP-2DS or equivalent

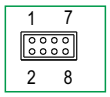

Mating Housing	HRS DF11-8DS or equivalent
Terminal	HRS DF11-**SC or equivalent

Pin No.	Function	Description
1,2	DA	Differential digital signal for parallel control.
3,4	DB	Differential digital signal for parallel control.
5,6	-V (Signal)	Negative output voltage signal. It is for certain function reference; it cannot be connected directly to the load.
7	NC	For standard model: None.
	SDA	For PMBus model: Serial Data used in the PMBus interface. (Note)
	CANH	For CANBus model: Data line used in CANBus interface. (Note)
8	NC	For standard model: None.
	SCL	For PMBus model: Serial Clock used in the PMBus interface. (Note)
	CANL	For CANBus model: Data line used in CANBus interface. (Note)

Note: Isolated signal, referenced to GND-AUX.

※ Control Pin No. Assignment(SW1)

Pin No.	Function	Description
1,2	Terminal resistance	SW1 is the selector of terminal resistor that is designed for DA/DB signals and parallel control function.