360W Compact Size and Wide Output Range Charger

NPB-360 series

Output connector: TB type

Output connector: AD1/XLR type

User's Manual

Click Me

UL62368-1 UL62368-1 BS EN/EN62368-1 BS EN/EN60335-1/2-29 IEC62368-1 IEC60335-1/2-29 J62368-1 TPTC004

R33100 RoHS AS/NZS60335-1/2-29

Industrial Automate Telecom Network EV Marine

Features

- 90~264Vac universal AC input, built-in PFC
- Charger for compatible with lead-acid and li-ion batteries
- Wide adjustable output range by VR:
  - ▶Charging voltage adjustable(10.5~15.2V、21~30.4V、42~60.8V)
  - ▶Charging current adjustable(50~100% rated current)
- 2 or 3 stage selectable by DIP S.W
- No load power consumption< 0.15W(AC S.W off)
- Fan ON-OFF control (Depends on internal temperature)
- -30℃~+70℃ wide operating temperature
- Protections: Short circuit / Over voltage /Over temperature / Battery reverse polarity protection
- Comply with UL/EN62368-1 and EN60335-1/2-29 dual certification
- Front panel LED indicator for charging status
- 3 years warranty

Applications

- Radio system backup solution
- Electric scooter charger
- Camping car、Buses、Heavy duty truck、Specialty vehicles
- Surveillance system
- Portable power tools

GTIN CODE

MW Search: https://www.meanwell.com/serviceGTIN.aspx

Description

NPB-360 series is a 360W charger for compatible with lead-acid (Flooded, Gel, AGM) and li-ion(Lithium iron, lithium manganese) batteries. This product is a class I power unit (with FG), equipped with a standard IEC320-C14 AC inlet and two or three-stage charging control. The entire series supplies different models with output voltages ranging between 10.5VDC and 60.8VDC that can satisfy the demands for various types of batteries devices.

Model Encoding

NPB - 360 - 24 XLR

- XLR: Output connector type (other options available by customers requested, please refer to page 6)
- 24: Nominal voltage (14.4V/28.8V/57.6V)
- 360: Rated wattage
- NPB: Series name

Type	Output Connector	Safety	Note
XLR	4 pin power pin		In Stock
AD1	Anderson Equivalent Connector	(48V UL certificated same as TB Type)	In Stock
TB	Terminal Block		In Stock

SPECIFICATION

MODEL		NPB-360-12□	NPB-360-24□	NPB-360-48□
		□ =XLR, AD1, TB		
OUTPUT	BOOST CHARGE VOLTAGE(Vboost)(default)	14.4V	28.8V	57.6V
	FLOAT CHARGE VOLTAGE(Vfloat)(default)	13.8V	27.6V	55.2V
	VOLTAGE ADJUSTABLE RANGE	10.5 ~ 15.2V	21 ~ 30.4V	42 ~ 60.8V
	OUTPUT CURRENT(Typ.) Note.5	20A	12A	6A
	CURRENT ADJUSTABLE RANGE	50% ~ 100%		
	MAX. POWER Note.3	304W	364.8W	364.8W
	RECOMMENDED BATTERY CAPACITY (AMP HOURS) Note.4	65 ~ 195AH	40 ~ 125AH	20 ~ 65AH
	LEAKAGE CURRENT FROM BATTERY (Typ.)	<1mA		
INPUT	VOLTAGE RANGE Note.5	90 ~ 264VAC 127 ~ 370VDC		
	FREQUENCY RANGE	47 ~ 63Hz		
	POWER FACTOR (Typ.)	PF>0.98/115VAC, PF>0.95/230VAC at full load		
	EFFICIENCY (Typ.) XLR	87%	91%	92%
	EFFICIENCY (Typ.) AD1	87%	91%	92%
	EFFICIENCY (Typ.) TB	88.5%	92%	92.5%
	AC CURRENT (Typ.)	4.5A/115VAC 2.2A/230VAC		
	INRUSH CURRENT (Typ.)	COLD START 50A at 230VAC		
	LEAKAGE CURRENT	<0.75mA/240VAC		
PROTECTION	SHORT CIRCUIT Note.6	Protection type : Constant current limiting, charger will shutdown after 5 sec, re-power on to recover		
	OVER VOLTAGE	16 ~ 20V	32 ~ 40V	64 ~ 75V
		Protection type : Shut down and latch off o/p voltage, re-power on to recover		
	REVERSE POLARITY	By internal fuse open		
	OVER TEMPERATURE	Hiccup mode, recovers automatically after temperature goes down		
FUNCTION	CHARGING CURVE	2 or 3 stage adjustable by DIP S.W		
	FAN CONTROL (Typ.)	Internal RTH3≧50℃ Fan ON, ≦45℃ Fan OFF		
ENVIRONMENT	WORKING TEMP.	-30 ~ +70℃ (Refer to "Derating Curve")		
	WORKING HUMIDITY	20 ~ 95% RH non-condensing		
	STORAGE TEMP., HUMIDITY	-40 ~ +85℃, 10 ~ 95% RH non-condensing		
	TEMP. COEFFICIENT	±0.05%/℃ (0 ~ 45℃)		
	VIBRATION	10 ~ 500Hz, 2G 10min./1cycle, 60min. each along X, Y, Z axes		
SAFETY & EMC (Note 7)	SAFETY STANDARDS	CB IEC62368-1,IEC60335-1/2-29, Dekra BS EN/EN62368-1,BS EN/EN60335-1/2-29, UL62368-1, AS/NZS60335-1/2-29, J62368-1 ,KC62368-1,EAC TP TC 004, BSMI CNS15598-1 approved		
	WITHSTAND VOLTAGE	I/P-O/P:3KVAC I/P-FG:2KVAC O/P-FG:0.5KVAC		
	ISOLATION RESISTANCE	I/P-O/P, I/P-FG, O/P-FG:100M Ohms / 500VDC / 25℃/ 70% RH		
	EMC EMISSION	**Parameter**	**Standard**	**Test Level / Note**
		Conducted	BS EN/EN55032 (CISPR32),BS EN/EN55014-1,CNS15936	Class B
		Radiated	BS EN/EN55032 (CISPR32),BS EN/EN55014-1,CNS15936	Class B
		Harmonic Current	BS EN/EN61000-3-2	Class A
		Voltage Flicker	BS EN/EN61000-3-3	-----
	EMC IMMUNITY	BS EN/EN55014-2,BS EN/EN55024,BS EN/EN55035, J55032(H29), KSC 9832, KSC 9835		
		Parameter	**Standard**	**Test Level / Note**
		ESD	BS EN/EN61000-4-2	Level 3, 8KV air ; Level 2, 4KV contact
		Radiated	BS EN/EN61000-4-3	Level 2, 3V/m
		EFT / Burst	BS EN/EN61000-4-4	Level 2, 1KV
		Surge	BS EN/EN61000-4-5	Level 2, 1KV/Line-Line,Level 3, 2KV/Line-Earth
		Conducted	BS EN/EN61000-4-6	Level 2, 3Vrms
		Magnetic Field	BS EN/EN61000-4-8	Level 1, 1A/m
		Voltage Dips and Interruptions	BS EN/EN61000-4-11	>95% dip 0.5 periods, 30% dip 25 periods, >95% interruptions 250 periods
OTHERS	MTBF	1324.7K hrs min. Telcordia TR/SR-332 (Bellcore) ; 173.9K hrs min. MIL-HDBK-217F (25℃)		
	DIMENSION	182.7*96*49mm (L*W*H)		
	PACKING	1.3Kg; 10pcs/ 14Kg / 1.13CUFT		

NOTE

1. Modification for charger specification may be required for different battery specification. Please contact battery vendor and MEAN WELL for details.
2. All parameters NOT specially mentioned are measured at 230VAC input, rated load and 25℃ of ambient temperature.
3. Refer to derating curve.
4. This is MEAN WELL's suggested range. Please consult your battery manufacturer for their suggestions about maximum charging current limitation.
5. Derating may be needed under low input voltages. Please check the derating curve for more details.
6. This protection mechanism is specified for the case the short circuit occurs after the charger is turned on.
7. The charger is considered a component which will be installed into a final equipment. The final equipment must be re-confirmed that it still meets EMC directives. For guidance on how to perform these EMC tests, please refer to "EMI testing of component power supplies." (as available on https://www.meanwell.com//Upload/PDF/EMI_statement_en.pdf)

※ Product Liability Disclaimer : For detailed information, please refer to https://www.meanwell.com/serviceDisclaimer.aspx

■ Block Diagram

PFC fosc : 65KHz
PWM fosc : 45KHz

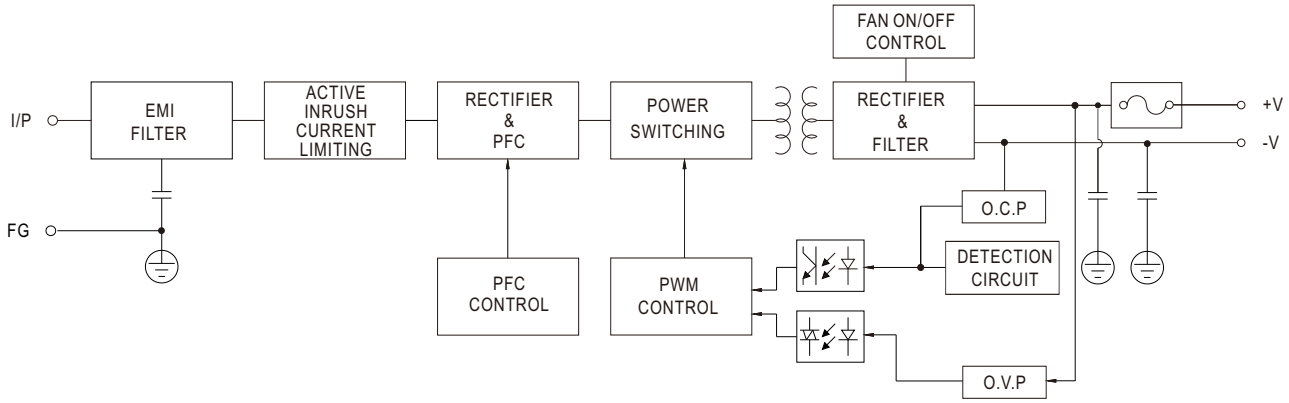

■ Derating Curve

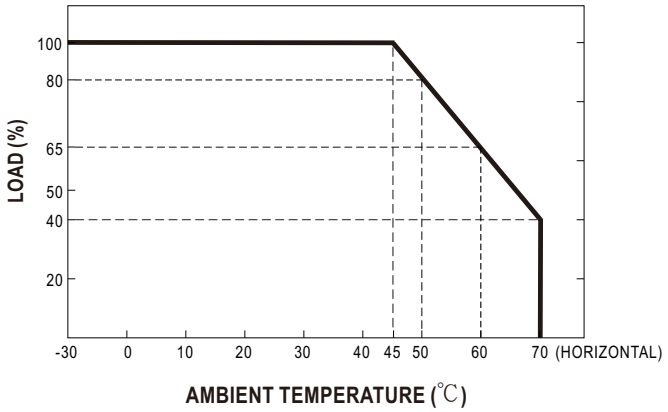

■ Static Characteristics

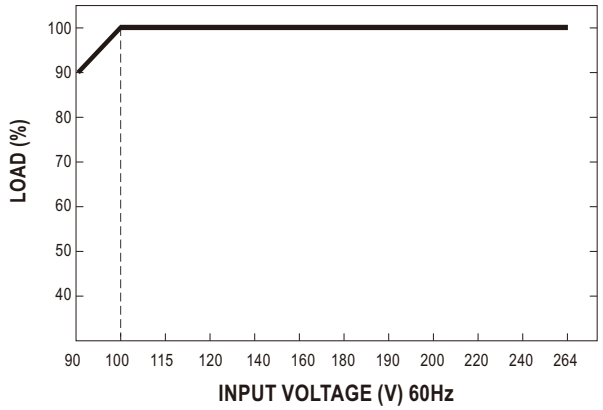

■ Function Manual

1.Charging Curve

1-1 2 or 3 stage selectable by DIP S.W

※ This series provides 2 or 3 stage charging curve.(Default 3 stage)

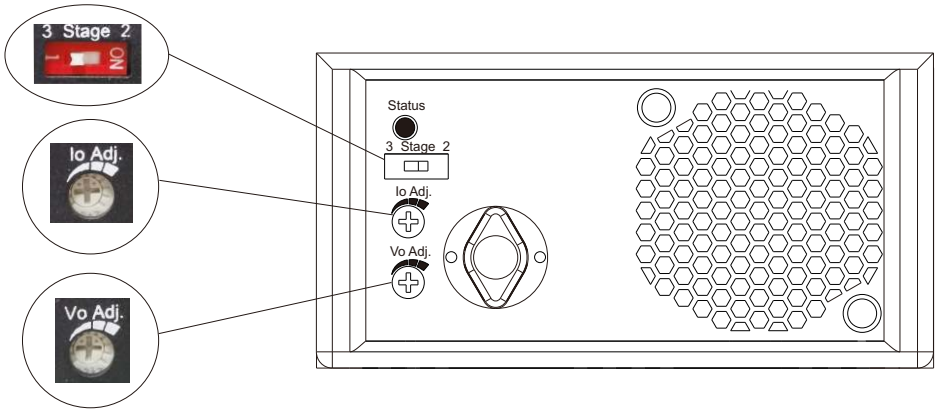

1-2 Charging Curve by DIP S.W

◎ 2 stage charging curve

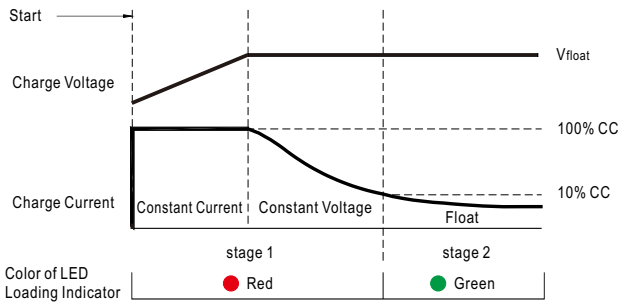

State	NPB-360-12	NPB-360-24	NPB-360-48
Constant Current	20A	12A	6A
V_{float}	13.8V	27.6V	55.2V

◎ 3 stage charging curve

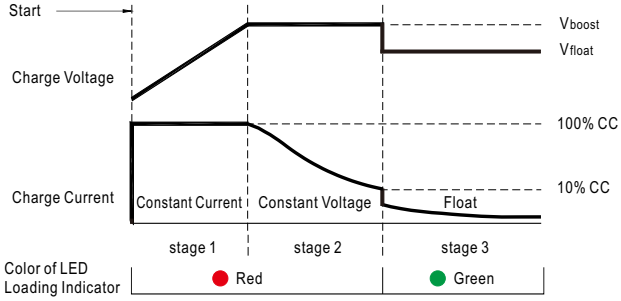

State	NPB-360-12	NPB-360-24	NPB-360-48
Constant Current	20A	12A	6A
V_{boost}	14.4V	28.8V	57.6V
V_{float}	13.8V	27.6V	55.2V

◎ 2 stage charging cure is suitable for Li-ion batteries(lithium iron and lithium manganese),
3 stage charging cure is suitable for lead-acid batteries (flooded ,Gel and AGM).

2.Charging voltage adjustable by VR

Model	NPB-360-12□	NPB-360-24□	NPB-360-48□
Output voltage adjustable range	10.5~15.2V	21~30.4V	42~60.8V

3.Charging current adjustable by VR

Model	NPB-360-12□	NPB-360-24□	NPB-360-48□
Output current adjustable range	10~20A	6~12A	3~6A

4. Front panel LED indicators & Corresponding signal at function pins

LED	Description
Green	Float (stage 3) or Battery full
Red	Charging (stage 1 or stage 2)

■ Mechanical Specification

(Unit: mm , tolerance ± 1mm)

Case No.PS-120F

◎ NPB-360-xx XLR/AD1
(Cable Type)

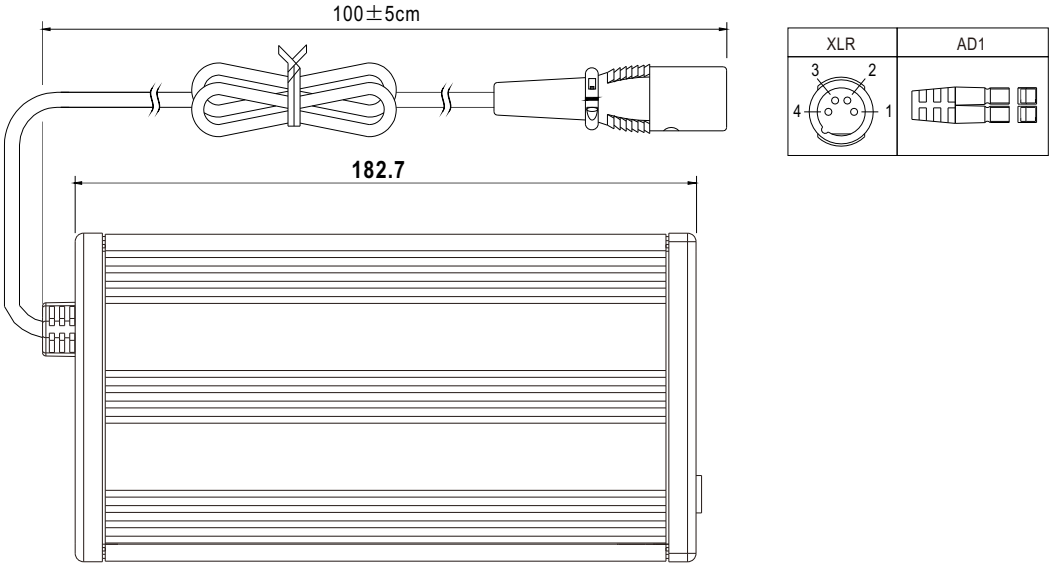

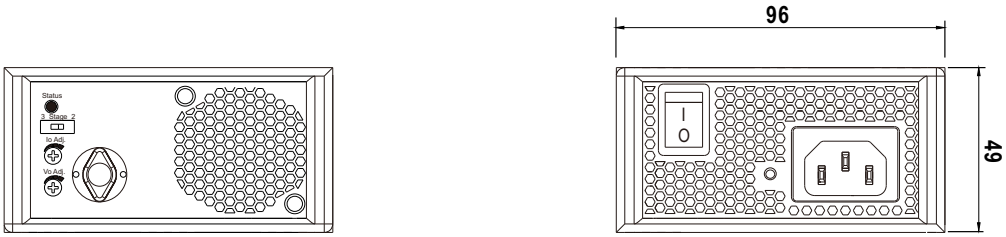

(Output Side) (Input Side)

◎ NPB-360-xx TB
(Terminal Block Type)

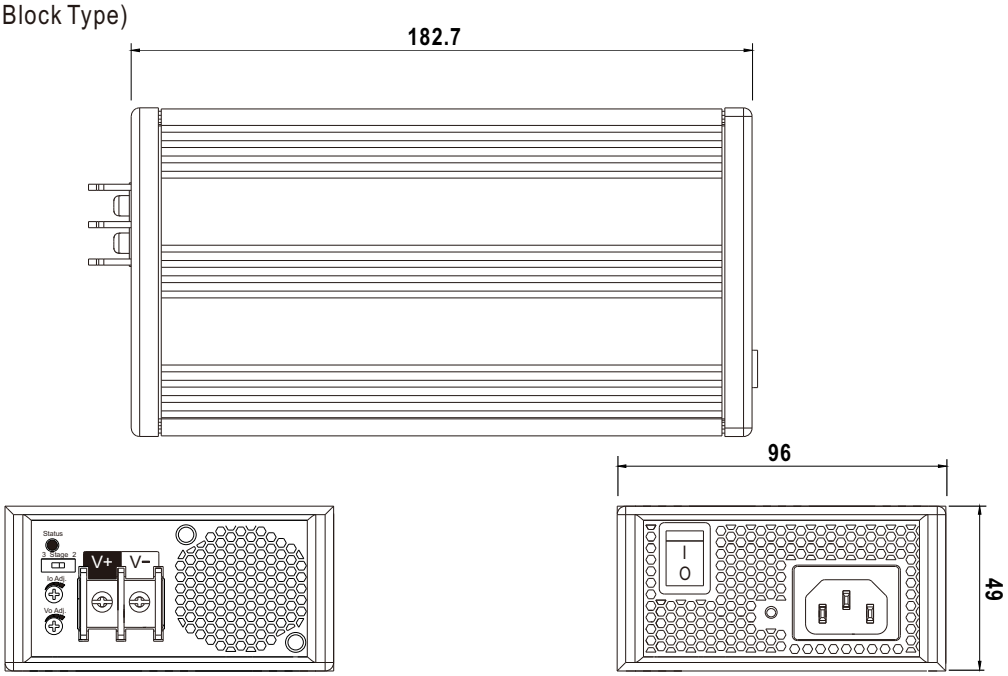

(Output Side) (Input Side)

■ Accessory List

※ Bracket (Optional accessory, Should ordered seperately)

MW's Order No.	Item	Quantity
PGG2MHS012D		4pcs/per model

■ Installation Diagram

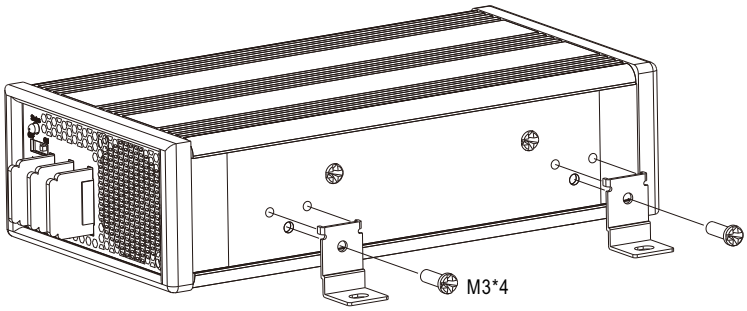

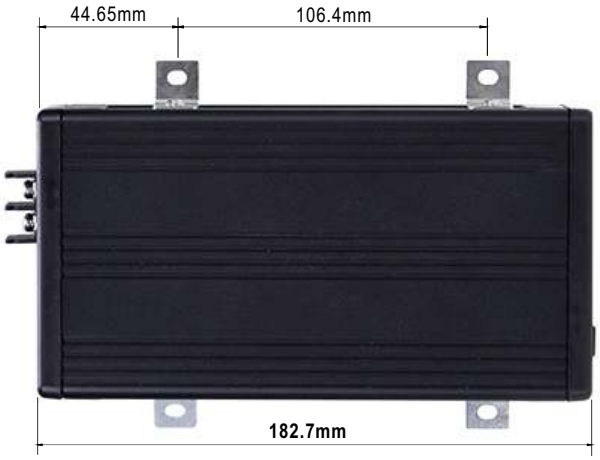

■ Plug Assignment

◎ Standard Output Connector

4pin XLR

UNICABLE 89M103-4P or equivalent

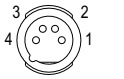

PIN NO.	OUTPUT
1,2	+V
3,4	-V

AD1

housing: Anderson 1327(red), 1327G6(black) equivalent
contacts: Anderson 261G2 (45A) equivalent

Red(+V) Black(-V)

TB

DT-66-B11W-02 or equivalent
Rating: 300V 40A

+V -V

◎ Optional DC plug: (Available in customized)

Min. DIN 4 Pin with Lock (male)	Type No.	Pin Assignment	
		PIN No.	Output(<7A)
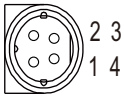 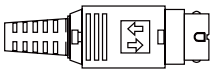 KYCON KPPX-4P equivalent	R7B	1	+Vo
		2	-Vo
		3	-Vo
		4	+Vo

DIN 3 Pin XLR	Type No.	Pin Assignment	
		PIN No.	Output(<10A)
3 pin XLR	XLR3	1	+Vo
		2	+Vo
		3	-Vo

DIN 3 Pin	Type No.	Pin Assignment	
		PIN No.	Output(<7A)
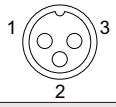	D3P	1	+Vo
		2	-Vo
		3	-Vo

DIN 2 Pin	Type No.	Pin Assignment	
		PIN No.	Output(<5A)
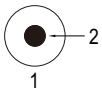 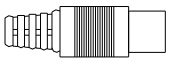	D2P	1	-Vo
		2	+Vo

DIN 3 Pin	Type No.	Pin Assignment	
		PIN No.	Output(<10A)
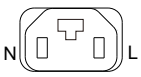 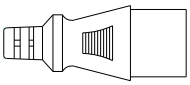	INL3	N	+Vo
		L	-Vo

AMP 1-480702-0 (6.35mm) equivalent	Type No.	Pin Assignment	
		PIN No.	Output(<7A)
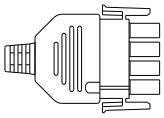 FG not connected to output connector	C4P	1	+Vo
		2	+Vo
		3	-Vo
		4	-Vo

■ INSTALLATION MANUAL

Please refer to : http://www.meanwell.com/manual.html