750W High Reliable Ultra Wide Output Range Intelligent Battery Charger NPB-750 series

AC input side

DC output side

User's Manual

Click Me

UL62368-1 | BS EN/EN62368-1 BS EN/EN60335-1/2-29 | IEC62368-1 IEC60335-1/2-29 | J62368-1 | TPTC004

Industrial | Automate | Telecom | Network | EV | Marine

Features

- Auto ranging with ultra-wide charging voltage (10.5~21V, 21~42V, 42~80V; Please refer to page 8 for setting)
- Built-in CANBus protocol for control, setting and monitoring
- Programmable charging curve via SBP-001
- Manual setting for 2/3 stage and 4 built-in charging curves via DIP S.W
- Multiple protections: Short circuit / Over voltage / Over temperature/ Battery under voltage /Battery reverse polarity (No damage)
- Charger OK and Battery Full signal
- Temperature compensation function to prolong battery life (Lead-acid only)
- -30℃~+70℃ wide operating temperature
- Thermal controlled DC fan for noise reduction
- Remote ON/OFF control
- Smart programmer available (Order NO.: SBP-001 , sold separately)
- Carry handle accessory available(Order NO.: Carry handle, sold separately)
- Comply with 62368-1 + 60335-1/-2-29 dual certification
- Suitable for lead-acid (Pb) and li-ion batteries
- 3 years warranty

Applications

- AGV
- E-Bike, E-Scooter, Camping car, Bus, Specialty vehicles
- Robotic lawn mower
- Washing robot
- Recreation craft, Personal yacht or workboat
- Surveillance system
- Telecommunication base station
- Radio system backup solution
- Equipments or instruments with back-up battery

GTIN CODE

MW Search: https://www.meanwell.com/serviceGTIN.aspx

Description

NPB-750 is a miniaturized, versatile, and ultra-wide voltage intelligent charger. It utilizes a fully digital control design with automatic battery voltage detection technology, with five key features including intelligent, versatile, user friendly, safe, and compact. The series have four models with output voltage ranges of 10.5~21V, 21~42V and 42~80V respectively. The charging voltage range of each model is wide enough to cover a variety of different battery voltages and battery chemistries, and there is a built-in intelligent voltage detection charging mode (Note this mode is set to OFF by factory default and is suitable for lithium batteries with BMS only). The NPB-750 can pair with MEAN WELL's SBP-001 programmer for digital configuration, such as adjust charging voltage/current, and set charging cycle time to protect battery lifetime. Through the user-friendly DIP S.W. on front panel, user may also directly adjust the 2/3 stage charging, current (50~100%), and select between the 4 types of preset charging curves. In addition, a CANBus communication protocol is built in to meet professional applications, which allows remote controlling and monitoring for the status of the charger. In terms of safety, it has intelligent detection for proper battery voltage and connection as well as protection from reverse polarity. It passes ITE IEC/EN/UL62368-1 and household appliances EN60335-1/-2-29 dual safety and 3-year warranty to guarantee reliable operation. The NPB-750 is truly an intelligent, safe, and reliable universal charger with outstanding cost performance.

Model Encoding

NPB - 750 - 24

- 24 — Output voltage (12V/24V/48V)
- 750 — Rated wattage
- NPB — Series name

SPECIFICATION

MODEL		NPB-750-12	NPB-750-24	NPB-750-48
OUTPUT	BOOST CHARGE VOLTAGE(Vboost)(default)	14.4V	28.8V	57.6V
	FLOAT CHARGE VOLTAGE(Vfloat)(default)	13.8V	27.6V	55.2V
	CHARGE VOLTAGE RANGE Note.3	10.5 ~ 21V	21 ~ 42V	42 ~ 80V
	MAX. OUTPUT CURRENT(CC) Note.4	43A	22.5A	11.3A
	MAX. POWER Note.4	722.4W	756W	759.4W
	RECOMMENDED BATTERY CAPACITY (AMP HOURS) Note.5	150 ~ 500AH	80 ~ 260AH	40 ~ 130AH
	LEAKAGE CURRENT FROM BATTERY (Typ.)	〈1mA		
INPUT	VOLTAGE RANGE Note.6	90 ~ 264VAC 127 ~ 370VDC		
	FREQUENCY RANGE	47 ~ 63Hz		
	POWER FACTOR (Typ.)	PF>0.98/115VAC, PF>0.95/230VAC at full load		
	EFFICIENCY (Typ.) Note.7	92%	93%	93%
	AC CURRENT (Typ.)	8.7A/115VAC 4A/230VAC		
	INRUSH CURRENT (Typ.)	COLD START 50A at 230VAC		
	LEAKAGE CURRENT	<1mA/240VAC		
PROTECTION	SHORT CIRCUIT Note.8	Protection type : Constant current limiting, charger will shutdown after 5 sec, re-power on to recover		
	OVER VOLTAGE Note.9	21.5 ~ 26V	43 ~ 52V	82 ~ 100V
		Protection type : Shut down and latch off o/p voltage, re-power on to recover		
	REVERSE POLARITY	Protected internal reverse detection, No damage, re-power on to recover after fault condition is removed		
	OVER TEMPERATURE	Shut down O/P voltage, recovers automatically after temperature goes down		
FUNCTION	CHARGING CURVE	2 or 3 stage selectable through DIP S.W on panel		
	CHARGING PARAMETERS ADJUSTABLE	Programmable: Constant current(CC),Tapper current(TC), Constant voltage(CV) and Float voltage(FV) can be set through SBP-001 with computer		
		Manual setting: 4 built-in charging curves adjustable via DIP S.W on panel, Please refer to function manual for more detail		
	AUTO RANGING FOR CHARGING (Typ.)	Please refer to functin manual for more detail (page 8)		
		Charging current adjustable 50~100% by via potentiometer on panel (Only for auto ranging mode)		
	CANBUS INTERFACE	CANBus 2.0B, Can control, Setting and monitoring(Vo,Io,charging curve, internal temp. and DC output ON/OFF)		
	CHARGER OK	The TTL signal out, Charger OK = H(4.5 ~ 5.5V) ; Charger failure or protection status =L(-0.5 ~ +0.5V)		
	BATTERY FULL SIGNAL	The TTL signal out, Battery full = H(4.5 ~ 5.5V); Charging = L(-0.5 ~ +0.5V)		
	REMOTE CONTROL	Short : Charger normal work Open : Charger stop charging		
	TEMPERATURE COMPENSATION	By external NTC		
	FAN SPEED CONTROL	Depends on internal temperature		
ENVIRONMENT	WORKING TEMP.	-30 ~ +70℃ (Refer to "Derating Curve")		
	WORKING HUMIDITY	20 ~ 95% RH non-condensing		
	STORAGE TEMP., HUMIDITY	-40 ~ +85℃, 10 ~ 95% RH non-condensing		
	TEMP. COEFFICIENT	±0.05%/℃ (0 ~ 50℃)		
	VIBRATION	10 ~ 500Hz, 2G 10min./1cycle, 60min. each along X, Y, Z axes		
SAFETY & EMC (Note 10)	SAFETY STANDARDS	CB IEC62368-1,IEC60335-1/2-29, Dekra BS EN/EN62368-1,BS EN/EN60335-1/2-29, UL62368-1, J62368-1, EAC TP TC 004 approved		
	WITHSTAND VOLTAGE	I/P-O/P:3KVAC I/P-FG:2KVAC O/P-FG:0.5KVAC		
	ISOLATION RESISTANCE	I/P-O/P, I/P-FG, O/P-FG:100M Ohms / 500VDC / 25℃/ 70% RH		
	EMC EMISSION	**Parameter**	**Standard**	**Test Level / Note**
		Conducted	BS EN/EN55032 (CISPR32),BS EN/EN55014-1	Class B
		Radiated	BS EN/EN55032 (CISPR32),BS EN/EN55014-1	Class B
		Harmonic Current	BS EN/EN61000-3-2	Class A
		Voltage Flicker	BS EN/EN61000-3-3	-----
	EMC IMMUNITY	J55032(H29)		
		Parameter	**Standard**	**Test Level / Note**
		ESD	BS EN/EN61000-4-2	Level 3, 8KV air ; Level 2, 4KV contact
		Radiated	BS EN/EN61000-4-3	Level 2, 3V/m
		EFT / Burst	BS EN/EN61000-4-4	Level 2, 1KV
		Surge	BS EN/EN61000-4-5	Level 2, 1KV/Line-Line,Level 3, 2KV/Line-Earth
		Conducted	BS EN/EN61000-4-6	Level 2, 3Vrms
		Magnetic Field	BS EN/EN61000-4-8	Level 1, 1A/m
		Voltage Dips and Interruptions	BS EN/EN61000-4-11	>95% dip 0.5 periods, 30% dip 25 periods, >95% interruptions 250 periods
OTHERS	MTBF	682.9K hrs min. Telcordia SR-332 (Bellcore) ; 67.7K hrs min. MIL-HDBK-217F (25℃)		
	DIMENSION	230*158*67mm (L*W*H)		
	PACKING	1.84Kg; 4pcs/ 9Kg / 1.63CUFT		

NOTE

1. Modification for charger specification may be required for different battery specification. Please contact battery vendor and MEAN WELL for details.
2. All parameters NOT specially mentioned are measured at 230VAC input, rated load and 25℃ of ambient temperature.
3. This is the range when programming Vboost or Vfloat by using SBP-001, the smart battery charging programmer.
4. Refer to derating curve.
5. This is MEAN WELL's suggested range. Please consult your battery manufacturer for their suggestions about maximum charging current limitation.
6. Derating may be needed under low input voltages. Please check the derating curve for more details.
7. The efficiency is measured at 16.8V charge voltage(12V model), 33.6V charge voltage(24V model), 67.2V charge voltage(48V model).
8. This protection mechanism is specified for the case the short circuit occurs after the charger is turned on.
9. Each model incorporates a MCU-controlled dynamic over voltage protection, which is about 125% of Vboost over Constant Current stage and Constant Voltage stage whereas 125% of Vfloat over Float stage.
10. The charger is considered a component which will be installed into a final equipment. All the radiation tests require an additional 13*26*30 NIZN magnetic clasp or magnetic ring to the output line for CLASS B and without NIZN magnetic clasp or magnetic ring for CLASS A. The final equipment must be re-confirmed that it still meets EMC directives. For guidance on how to perform these EMC tests, please refer to "EMI testing of component power supplies." (as available on https://www.meanwell.com//Upload/PDF/EMI_statement_en.pdf)
11. The ambient temperature derating of 3.5℃/1000m with fanless models and of 5℃/1000m with fan models for operating altitude higher than 2000m(6500ft).

※ Product Liability Disclaimer : For detailed information, please refer to https://www.meanwell.com/serviceDisclaimer.aspx

Block Diagram

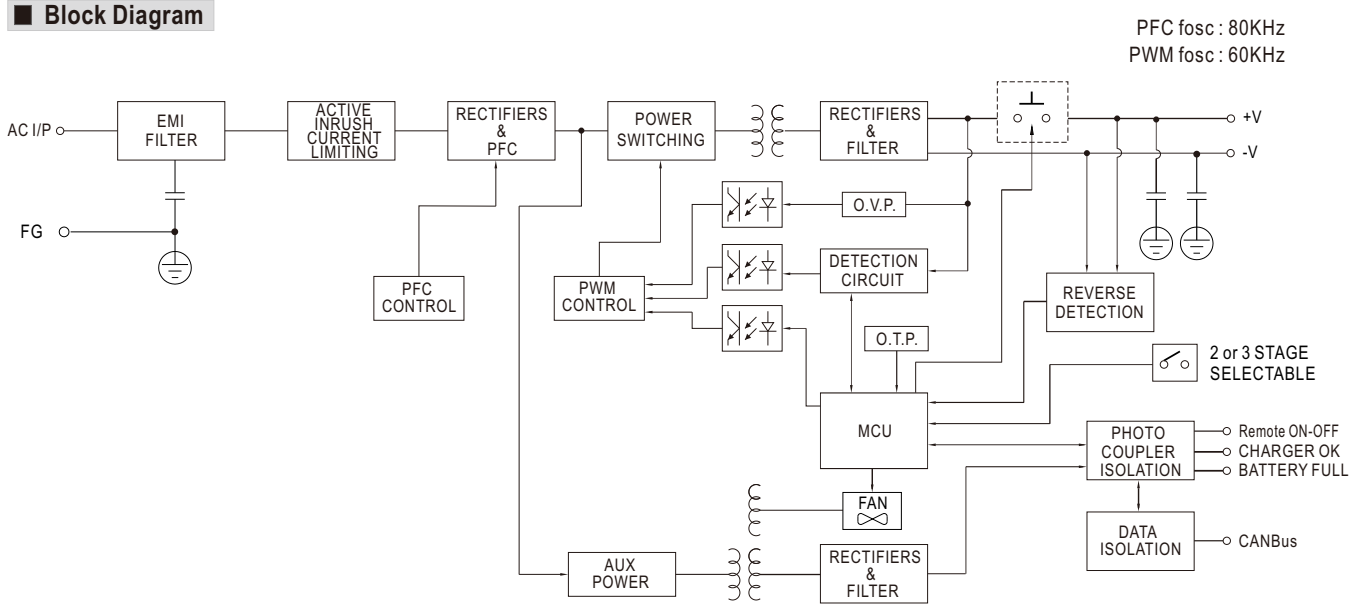

Derating Curve

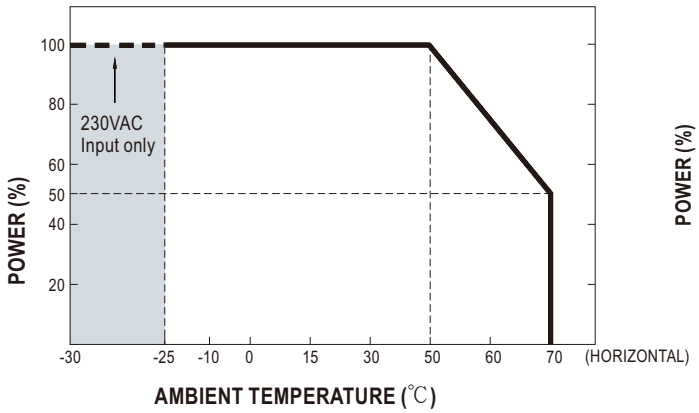

Static Characteristics

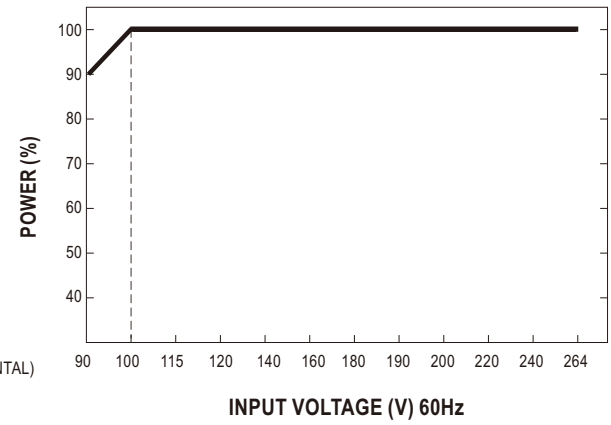

Derating Curve

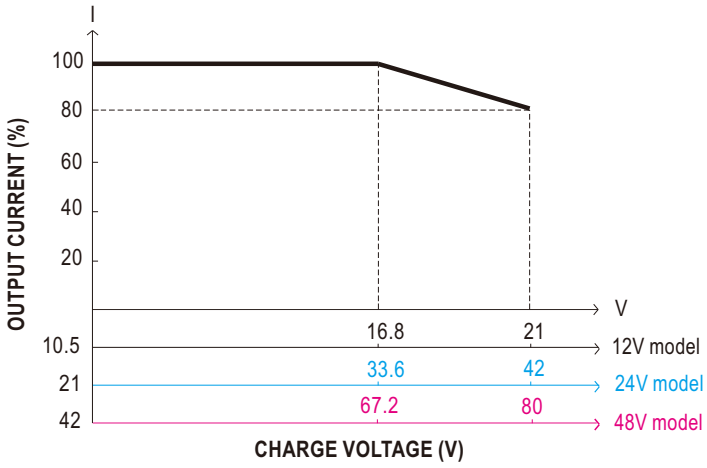

◎ The rated current should change with the output voltage programming accordingly.

■ Function Manual

1.Manual setting

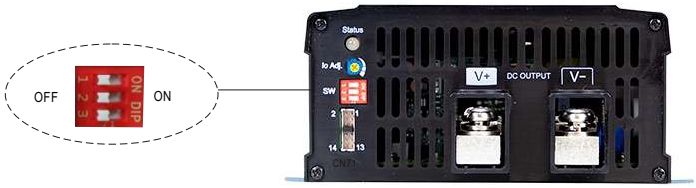

1.1 2 or 3-stage selectable via DIP S.W on panel

S.W NO.	Function	Description
1	OFF: 3 stage(Default), ON: 2 stage	This series provides 2 or 3 stage charging curve
2	Charging curve adjustable	4 built-in charging curves adjustable via DIP S.W
3		

1.2 Charging curve can be adjustable via DIP S.W on panel

◎ **2 stage** charging curve

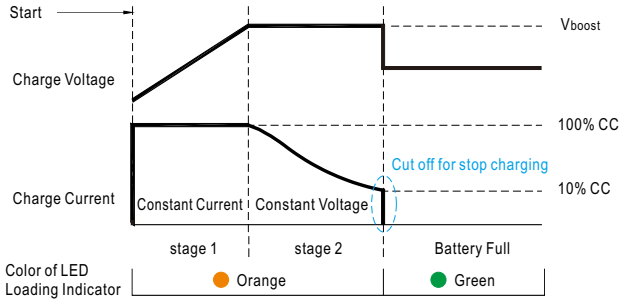

State	NPB-750-12	NPB-750-24	NPB-750-48
Constant Current	43A	22.5A	11.3A
Vboost	14.4V	28.8V	57.6V

◎ Suitable for lead-acid batteries (flooded, Gel and AGM) and Li-ion batteries (lithium iron and lithium manganese).

◎ Default **3 stage** charging curve

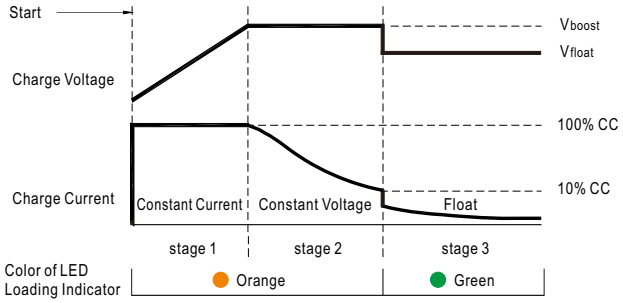

State	NPB-750-12	NPB-750-24	NPB-750-48
Constant Current	43A	22.5A	11.3A
Vboost	14.4V	28.8V	57.6V
Vfloat	13.8V	27.6V	55.2V

◎ Suitable for lead-acid batteries (flooded, Gel and AGM) and Li-ion batteries (lithium iron and lithium manganese).

※ The default curve is programmable, whereas other pre-defined curves can be activated by the means of the DIP S.W; please refer to the table below and the Mechanical Specification.

◎ Embedded **2 stage** charging curve

DIP SW position		12V model		
2	3	Description	CC(default)	Vboost
OFF	OFF	Default, programmable	43A	14.4
ON	OFF	Pre-defined, gel battery		14.0
OFF	ON	Pre-defined, flooded battery		14.2
ON	ON	Pre-defined, AGM battery,LiFe04		14.6
DIP SW position		24V model		
2	3	Description	CC(default)	Vboost
OFF	OFF	Default, programmable	22.5A	28.8
ON	OFF	Pre-defined, gel battery		28.0
OFF	ON	Pre-defined, flooded battery		28.4
ON	ON	Pre-defined, AGM battery,LiFe04		29.2
DIP SW position		48V model		
2	3	Description	CC(default)	Vboost
OFF	OFF	Default, programmable	11.3A	57.6
ON	OFF	Pre-defined, gel battery		56.0
OFF	ON	Pre-defined, flooded battery		56.8
ON	ON	Pre-defined, AGM battery,LiFe04		58.4

◎ Embedded **3 stage** charging curve

DIP SW position		12V model			
2	3	Description	CC(default)	Vboost	Vfloat
OFF	OFF	Default, programmable	43A	14.4	13.8
ON	OFF	Pre-defined, gel battery		14.0	13.6
OFF	ON	Pre-defined, flooded battery		14.2	13.4
ON	ON	Pre-defined, AGM battery,LiFe04		14.6	14.0
DIP SW position		24V model			
2	3	Description	CC(default)	Vboost	Vfloat
OFF	OFF	Default, programmable	22.5A	28.8	27.6
ON	OFF	Pre-defined, gel battery		28.0	27.2
OFF	ON	Pre-defined, flooded battery		28.4	26.8
ON	ON	Pre-defined, AGM battery,LiFe04		29.2	28.0
DIP SW position		48V model			
2	3	Description	CC(default)	Vboost	Vfloat
OFF	OFF	Default, programmable	11.3A	57.6	55.2
ON	OFF	Pre-defined, gel battery		56.0	54.4
OFF	ON	Pre-defined, flooded battery		56.8	53.6
ON	ON	Pre-defined, AGM battery,LiFe04		58.4	56.0

2.Programmable charging curve

Charging Curve can be set via SBP-001 with computer

Step 1

Hardware configuration

Step	Action	Note
1	DIP S.W position 2 and 3 need to swith to “OFF” position	
2	The pin7 and pin8(Jumper) of 14pins connector need to removed when using SBP-001	
3	Communication cable of SBP#1 connected between NPB-750 of personal computer	

Step 2

Connect to software for setting

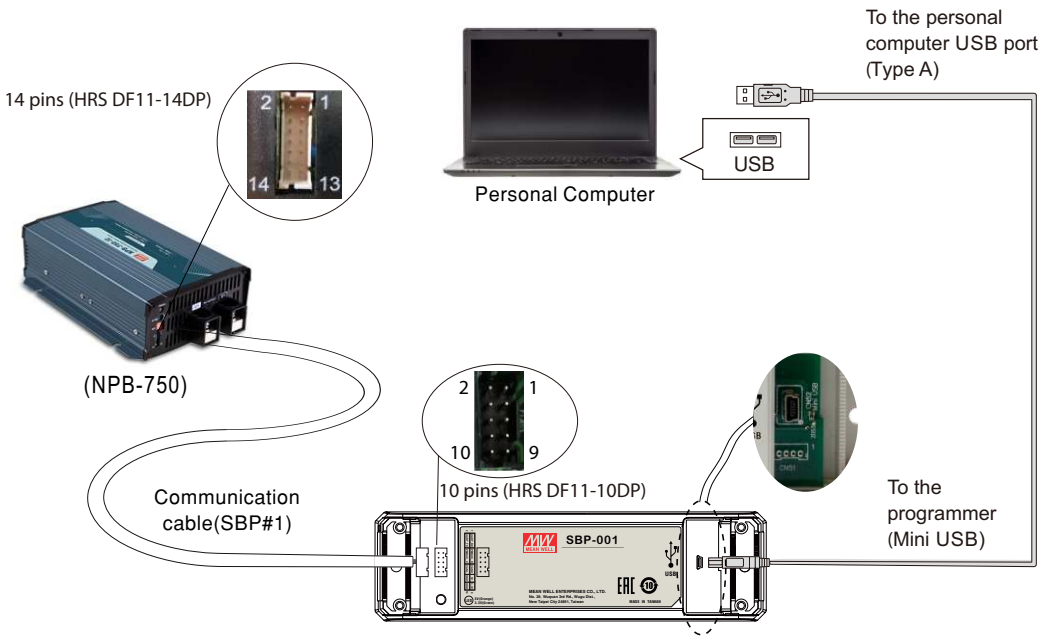

Smart programmer (Sold separately)

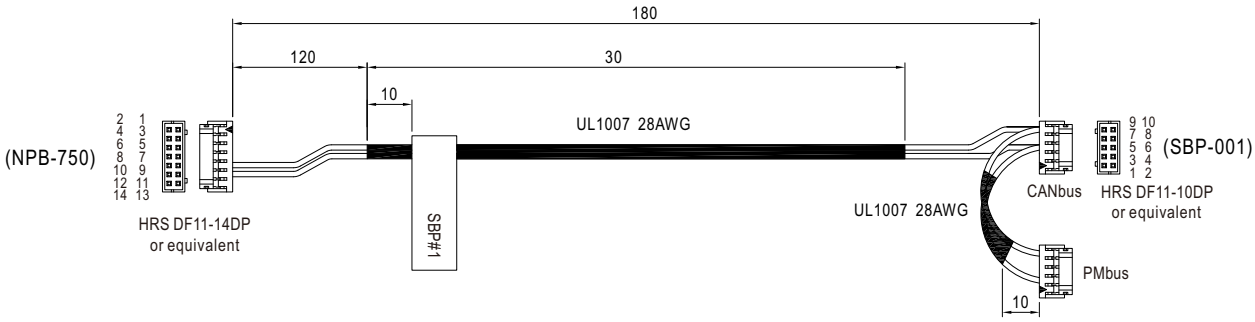

NPB-750 pin assigment:

Connector	Pin Assigment													
NPB-750 14pins connector (Connector Part No.:HRS DF11-14DP)	1	2	3	4	5	6	7	8	9	10	11	12	13	14
	A1	A0	+3.3V	GND	Battery Full	Charger OK	Remote ON-OFF	+12Vaux	GND-AUX		CANH	CANL	NTC (RTH+)	NTC (RTH-)

SBP-001 pin assigment:

Connector	Pin Assigment									
SBP-001 10 pins connector (Connector Part No.:HRS DF11-10DP)	1	2	3	4	5	6	7	8	9	10
	UART_RX	UART_TX	PMBUS_D	PMBUS_C	CANH	CANL	5V	GND	3.3V	GND

※ **Function Description:**

SBP-001 is a programmer, particularly for MEAN WELL's various programmable battery charger models to program the parameters of charging curves, such as Constant current (CC),tapper current(TC),Constant voltage (CV),float voltage (FV),Charging time out and so on,to accommodate the diversified battery specification in industry.With the design accounting for simplicity and convenience, users can easily configure MEAN WELL's programmable battery chargers with SBP-001 programmer and the computer; all of the setups are able to be finished easily by the means of the specific software.

Note:(1) Tapper current(TC) default is 10%, can be fine tuned from 2% to 30% by SBP-001 with computer or CANBus Interface.

(2) Please contact MEAN WELL for more details.

※ **Software Interface**:

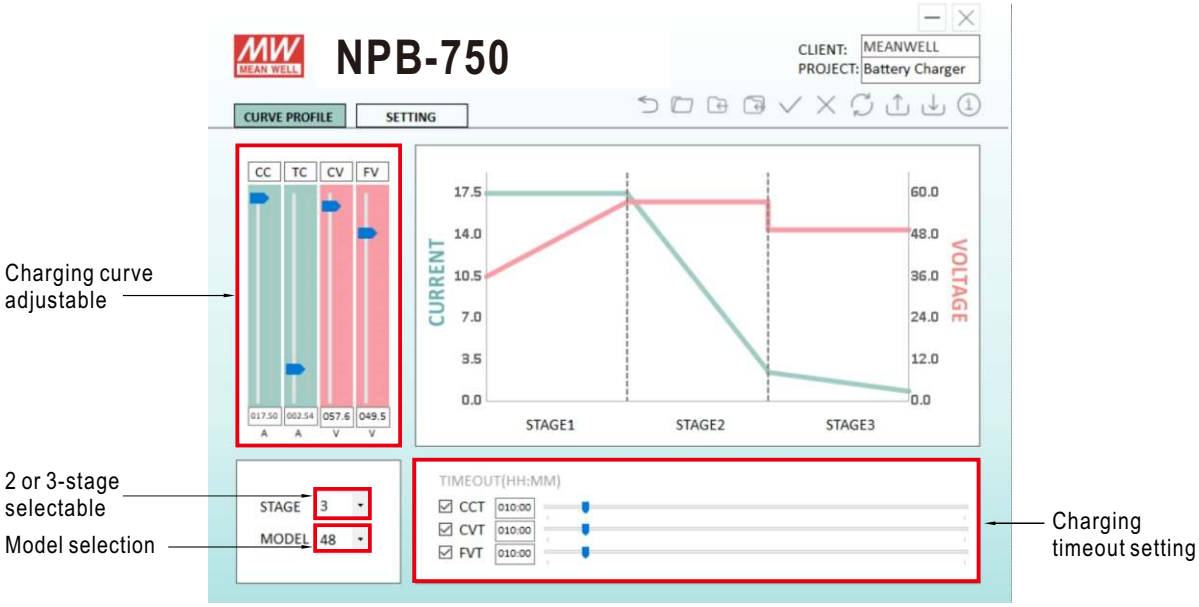

3. Auto Ranging for Charging (Default non-Auto ranging)

※ Function Description:

a. NPB-750 has built-in auto ranging mode.

(Note this mode is set to OFF by factory default and is suitable for lithium batteries with BMS only)

b. When operating in auto ranging mode , NPB-750 will automatically detect the voltage of battery that is connected and adjust charging voltage accordingly. It will not start charging unit appropriate battery voltage is detected.

c. While under auto ranging mode, NPB-750's built-in MCU will adjust charging voltage. There is no potentiometer for voltage adjustment on the front panel.

d. While under auto ranging mode, the charging current can be adjusted between 50~100%.

(The charging current can not be adjusted via potentiometer while not operating in auto ranging mode)

※ When using the auto ranging charging curve function, please pay attention to the following:

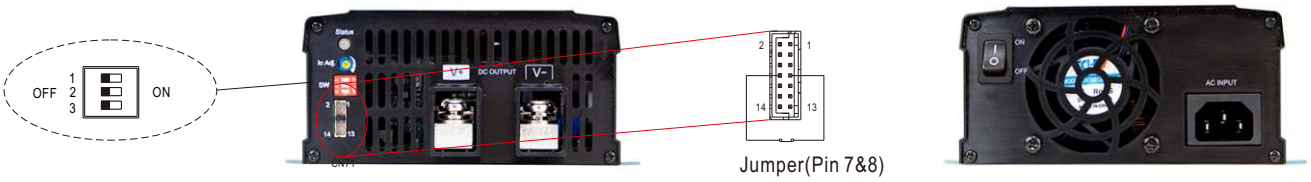

(DC Output Side) (AC Input Side)

(1) Default factory setting is OFF via DC output side DIP S.W, Follow steps A1~A6 below to enable the setting.

(2) Auto ranging function should use together with Lithium batteries and BMS (Battery Management System).

(3) Do not exceed the output voltage and current ranges as specified in the NPB-750 specifications (please refer to page 2).

※ Auto Ranging function by DIP S.W Setting (Please make sure that the battery is lithium battery and must be matched with BMS before using. Auto ranging function is prohibited for non-lithium battery)

Step	Action	Note
A1	Set DIP S.W all in the "OFF" position(Default).	
A2	Applying AC main and swith on under remote OFF.	
A3	Within 15 seconds , set DIP S.W, all in the "ON" position and all back in the "OFF" again.	
A4	The green LED flashes 3 times means the process is successfully done.	
A5	Restart the NPB-750 to load smart charging curve setting. (AC input on/off or swith on/off on AC input side)	AC INPUT → AC INPUT or
A6	Pin 7 & 8 put on jumper.	

※ Back to non-auto ranging as following:

Step	Action	Note
B1	All DIP switch for charging curve setting are switch to ON position before applying AC main.	
B2	Applying AC main under remote OFF condition.	
B3	Switch the DIP switch from all ON to all OFF, and then again, back to all ON in 15 seconds.	
B4	If LED flashes in GREEN for 3 times, it means the setting is succeeded.	
B5	Remote ON the unit, and it's now back to factory setting.	

4.Auto Derating function

※ Covered by over temperature protection, auto de-rating function works under operation either in charging curve (2 or 3 stage) or under control by communication protocol(CANBus).

$T_{1(Typ.)}$: Maximum ambient temperature of 100% output current.

$T_{2(Typ.)}$: T1+5℃.

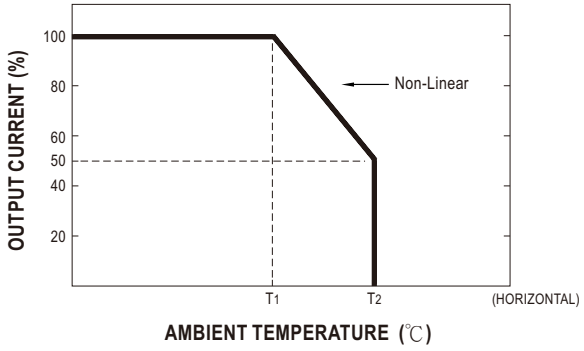

5.CANBus communication interface

CANBus 2.0B version,Can control, setting and monitoring that including output charging voltage, output charging current,internal temperature and DC output ON/OFF.....and so on, please refer to the **user manual** for more details.

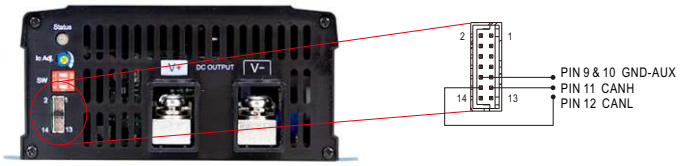

CANBus commend list

Command Code	Command Name	Transaction Type	# of data Bytes	Description
0x0000	OPERATION	R/W	1	ON/OFF control
0x0020	VOUT_SET	R/W	2	Output voltage setting (format: value, F=0.01)
0x0030	IOUT_SET	R/W	2	Output current setting (format: value, F=0.01)
0x0040	FAULT_STATUS	R	2	Abnormal status
0x0050	READ_VIN (NPB-450/750 Does not support)	R	2	Input voltage read value (format: value, F=0.1)
0x0060	READ_VOUT	R	2	Output voltage read value (format: value, F=0.01)
0x0061	READ_IOUT	R	2	Output current read value (format: value, F=0.01)
0x0062	READ_ TEMPERATURE_1	R	2	Internal ambient temperature (format: value, F=0.1)
0x0080	MFR_ID_B0B5	R	6	Manufacturer's name
0x0081	MFR_ID_B6B11	R	6	Manufacturer's name

Command Code	Command Name	Transaction Type	# of data Bytes	Description
0x0082	MFR_MODEL_B0B5	R	6	Manufacturer's model name
0x0083	MFR_MODEL_B6B11	R	6	Manufacturer's model name
0x0084	MFR_REVISION_B0B5	R	6	Firmware revision
0x0085	MFR_LOCATION_B0B2	R/W	3	Manufacturer's factory location
0x0086	MFR_DATE_B0B5	R/W	6	Manufacturer date
0x0087	MFR_SERIAL_B0B5	R/W	6	Product serial number
0x0088	MFR_SERIAL_B6B11	R/W	6	Product serial number
0x00B0	CURVE_CC	R/W	2	Constant current setting of charge curve (format: value, F=0.01)
0x00B1	CURVE_CV	R/W	2	Constant voltage setting of charge curve (format: value, F=0.01)
0x00B2	CURVE_FV	R/W	2	Floating voltage setting of charge curve (format: value, F=0.01)
0x00B3	CURVE_TC	R/W	2	Taper current setting value of charging curve (format: value, F=0.01)
0x00B4	CURVE_CONFIG	R/W	2	Configuration setting of charge curve
0x00B5	CURVE_CC_TIMEOUT	R/W	2	CC charge timeout setting of charging curve
0x00B6	CURVE_CV_TIMEOUT	R/W	2	CV charge timeout setting of charging curve
0x00B7	CURVE_FV_TIMEOUT	R/W	2	FV charge timeout setting of charging curve
0x00B8	CHG_STATUS	R	2	Charging status reporting
0x00B9	CHG_RST_VBAT	R/W	2	Reset the voltage point of the charging curve after the battery is fully charged
0x00C0	SCALING_FACTOR	R	2	Scaling ratio
0x00C1	SYSTEM_STATUS	R	2	System status
0x00C2	SYSTEM_CONFIG	R/W	2	System configuration

6.Charger OK Signal

Charger OK signal is a TTL level signal.

The maximum sourcing current is 10mA.

Between Charger OK (pin 6) and GND-AUX (pin 9 & 10)	Charging Status
"High" : 4.5 ~ 5.5V	Work normally
"Low" : -0.5 ~ 0.5V	Failure or protection function activated

7.Battery Full Signal

Battery full signal is a TTL level signal.

The maximum sourcing current is 10mA.

Between Battery Full (pin 5) and GND-AUX (pin 9 & 10)	Status	LED indication
"High" : 4.5 ~ 5.5V	Battery Full	Green
"Low" : -0.5 ~ 0.5V	Charging	Orange

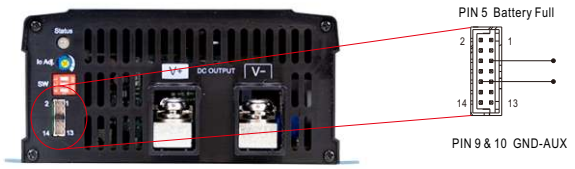

8.Remote ON-OFF Control

The NPB-750 can be turned ON/OFF by using the "Remote Control" function.

Between Remote ON-OFF (pin 7) and +12Vaux (pin 8)	Status
S.W Short (pin 7 = 10.8 ~ 13.2V)	ON (Default)
S.W Open (pin 7 = -0.5 ~ 0.5V)	OFF

※ The charger is shipped, by factory default, with Remote ON-OFF(pin 7) and +12Vaux (pin 8) shorted by connector.

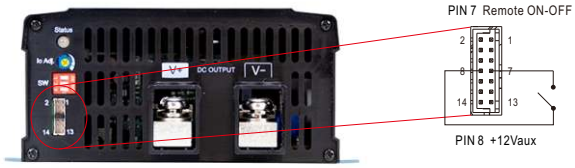

9.Temperature compensation(3 stage only)

Temperature compensation function to prolong battery life for lead-acid batteries. Temperature compensation range is 0 ~ 40℃ .

The battery temperature sensor comes along with the charger can be connected to the unit to allow temperature compensation of the charging voltage.

If the sensor is not used, the charger works normally.

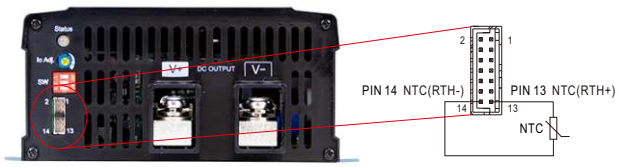

10. DC Output Side LED Indicators & Corresponding Signal at Function Pins

LED	Description
Green	Float (stage 3) or Battery full
Orange	Charging (stage 1 or stage 2)
Orange (Flashing)	Auto ranging for charging
Red	Abnormal status (OTP, OVP, Short circuit, Reverse polarity, Charging timeout.)
Red (Flashing)	The LED will flash with the red light when the internal temperature reaches 95℃; under this condition, the unit still operates normally without entering OTP. (In the meantime, an alarm signal will be sent out through the CANBus interface.)

■ Mechanical Specification

※ **Intelligent Battery Charger model**
(Unit: mm , tolerance ± 1mm)

Case No.285A

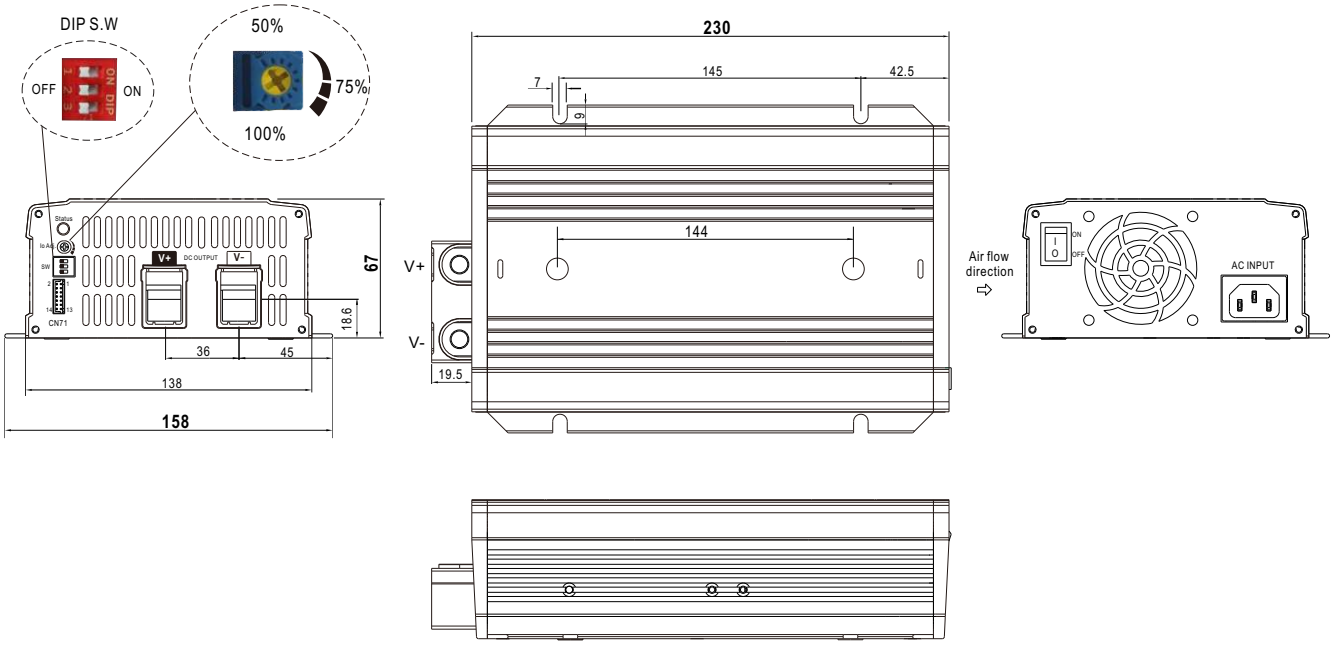

※ DIP S.W

	1	2	3	Description
1 2 3 OFF ON	OFF: 3 stage ON: 2 stage	OFF	OFF	Default, programmable
		ON	OFF	Pre-defined, Gel battery
		OFF	ON	Pre-defined, flooded battery
		ON	ON	Pre-defined, AGM battery,LiFe04

※ LED Status Table

LED Indicator	Status
Green	Float stage (stage 3) or full charged
Orange	Charging (stage 1 or stage 2)
Orange (Flashing)	Charging with auto ranging function
Red	Abnormal (OTP, OVP, short circuit, reverse polarity, time out)
Red (Flashing)	Unit over heated internally

※ Control Pin No. Assignment : HRS DF11-14DP or equivalent

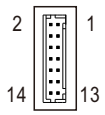

Mating Housing	HRS DF11-14DS or equivalent
Terminal	HRS DF11-**SC or equivalent

※ Connector Pin No. Assignment : HRS DF11-14DP or equivalent

Pin No.	Assignment	Mating Housing	Terminal
1	A1	HRS DF11-14DS or equivalent	HRS DF11-**SC or equivalent
2	A0		
3	+3.3V		
4	GND(Signal)		
5	Battery Full		
6	Charger OK		
7	Remote ON-OFF		
8	+12Vaux		
9,10	GND-AUX		
11	CANH		
12	CANL		
13	NTC(RTH+)		
14	NTC(RTH-)		

Pin No.	Function	Description
1	A1	CANBus interface address line(A1). Referenced to GND(Signal) Pin4.(Note.1)
2	A0	CANBus interface address line(A0). Referenced to GND(Signal) Pin4.(Note.1)
3	+3.3V	+3.3V voltage output, referance to GND(pin 4).
4	GND(Signal)	CANBus interface address lines GND.
5	Battery Full	Battery Full Signal, referenced to GND-AUX(Pin 9 & 10). The Signal is a TTL level signal. The maximum sourcing current is 10mA and only for output.(Note.2) Low (-0.5 ~ 0.5V) : When the battery is charging. High (4.5 ~ 5.5V) : When the battery is full.
6	Charger OK	Charger OK Signal, referenced to GND-AUX(Pin 9 & 10). The Signal is a TTL level signal. The maximum sourcing current is 10mA and only for output.(Note.2) Low (-0.5 ~ 0.5V) : When the charger fails or the protect function is activating. High (4.5 ~ 5.5V) : When the charger is working properly.
7	Remote ON-OFF	Remote charger ON/OFF Function. The charger can turn the output ON/OFF by dry contact between Remote ON-OFF and +12V-AUX.(Note.2) Short (10.8 ~ 13.2V) : Charger ON ; Open (-0.5 ~ 0.5V) : Charger OFF ; The maximum input voltage is 13.2V.
8	+12Vaux	It is controlled by the Remote ON-OFF control.
9,10	GND-AUX	The signal return is isolated from the output terminal. (+V & -V)
11	CANH	For CANBus model: Data line used in CANBus interface. (Note.2).
12	CANL	For CANBus model: Data line used in CANBus interface. (Note.2).
13	NTC(RTH+)	Temperature sensor(NTC, 5KOhm) comes along with the charger can be connected to the unit to allow temperature
14	NTC(RTH-)	compensation of the charging voltage for lead-acid batteries. Temperature compensation range is 0 ~ 40℃(3 stage only).

Note1: Non-isolated signal, referenced to [GND(signal)].
Note2: Isolated signal, referenced to GND-AUX

■ Accessory List

※ NTC Sensor and Remote Control mating along with NPB-750 (Standard accessory)

	Item	Quantity
1	NTC sensor wire 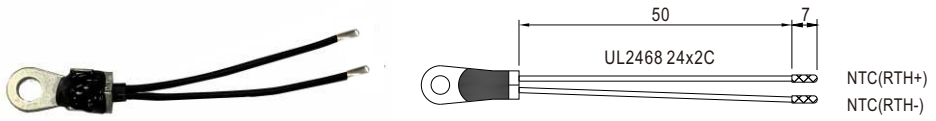 	1
2	Remote control mating wire 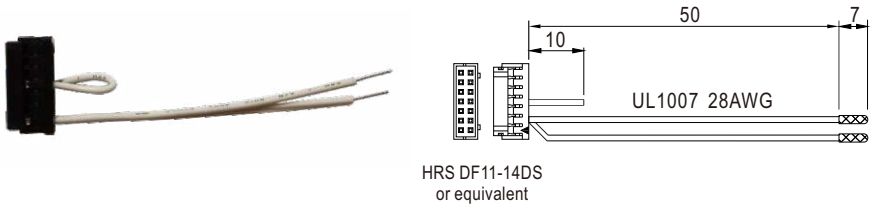 	1

Connection Diagram
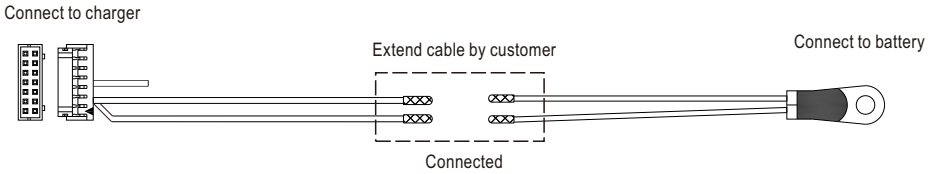

※ Carry handle (Optional accessory, battery charger and pull handle should be ordered seperately)

MW's Order No.	Item		Quantity
Carry Handle	①	Handle	1
	②	Foot pad	4
	③	Screw	2

① Handle

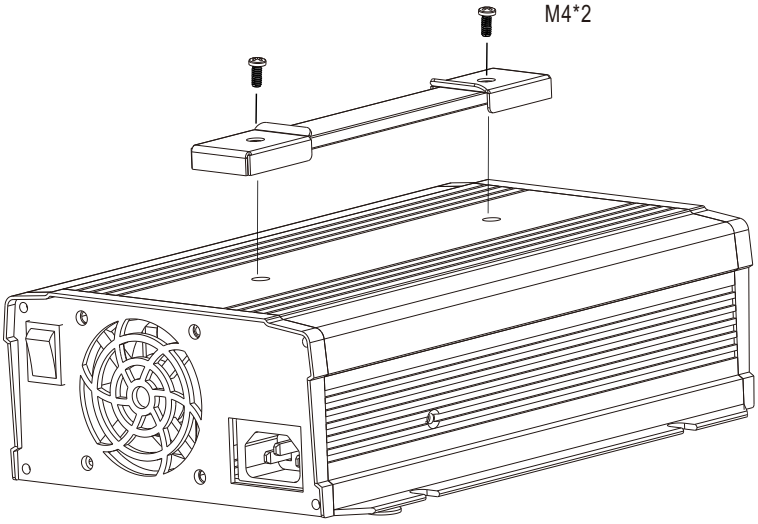

② Foot pad

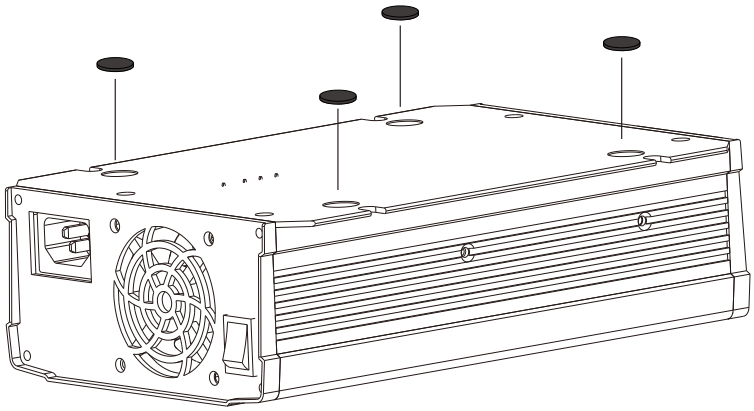

■ INSTALLATION MANUAL

Please refer to : http://www.meanwell.com/manual.html