IC ECSCB 100-277 DALI 0-10V CS

Art. 166732

Product features

- Bluetooth-controlled Casambi-enabled
- Wide voltage 100...277 Vac input
- One-Channel 0-10V / DALI 2 controller
- 12...24 Vdc input for a motion sensor
- Button push dimming
- Utilizes bluetooth mesh technology for reliable and secure wireless communication
- 5 year warranty

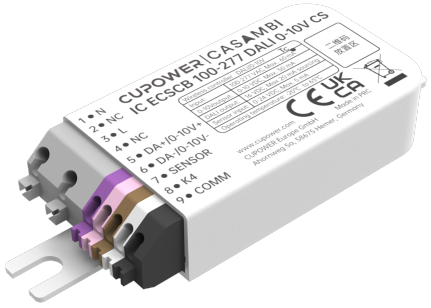

Electrical specifications

Mains voltage supply	
Rated input voltage range	100...277 Vac
Max. Input current	0.05 A @ 100 Vac
RF transmit power	+ 8 dBm
Wireless frequency	2.4 GHz
Wireless range (open air)	50 m

Control output	
Output voltage 0-10V	0...10 Vdc
Max 0-10V sinking current	50 mA
Output voltage DALI	14...16 Vdc
Output current DALI	20 mA

Environmental specifications

Operating temperature	-20...+65°C
Storage temperature	-25...+85°C
Working humidity	0%...80%
Store humidity	0%...95%
Lifetime	at Tc 75°C: 50,000 hrs @ 100 Vac
Maximum Tc temperature	75°C
Lifetime rating	50,000 hrs
Moisture and dust rating	IP20

Preliminary Version

Hunan Xiezhen Electronics Co., Ltd.
Block A&B, Building 11, Innovation Park Linyi Road,
BailLutang Town Suxian District, Chenzhou, Hunan - China

CUPOWER Europe GmbH
Ahornweg 5a
58675 Hemer – Germany

version: 20250318

www.cupower.com

Errors excepted. We reserve the right to make alterations in the interest of improving our products.

IC ECSCB 100-277 DALI 0-10V CS

Art. 166732

Dimensions

Housing dimensions	
Length (L)	80.7 mm
Width (W)	30 mm
Height (H)	15 mm
Weight	0.022 kg

Packaging details	
Packing Units	72 pcs.
Carton Size	193 × 172 × 111 mm
Weight	1.9 kg

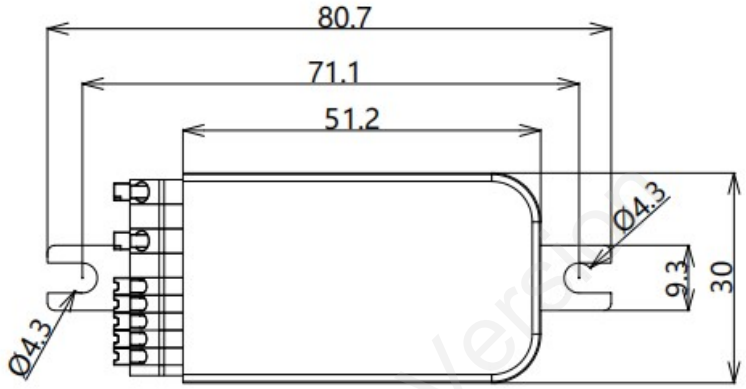

Ratio 1,000

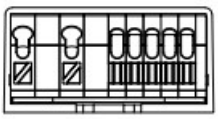



unit: mm
tol: ±0.2 mm

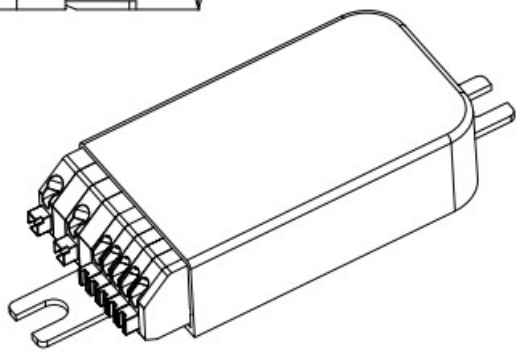

Preliminary Version

Hunan Xiezhen Electronics Co., Ltd.
Block A&B, Building 11, Innovation Park Linyi Road,
BailLutang Town Suxian District, Chenzhou, Hunan - China

CUPOWER Europe GmbH
Ahornweg 5a
58675 Hemer – Germany

version: 20250318

www.cupower.com

Errors excepted. We reserve the right to make alterations in the interest of improving our products.

Applicable wiring diagram

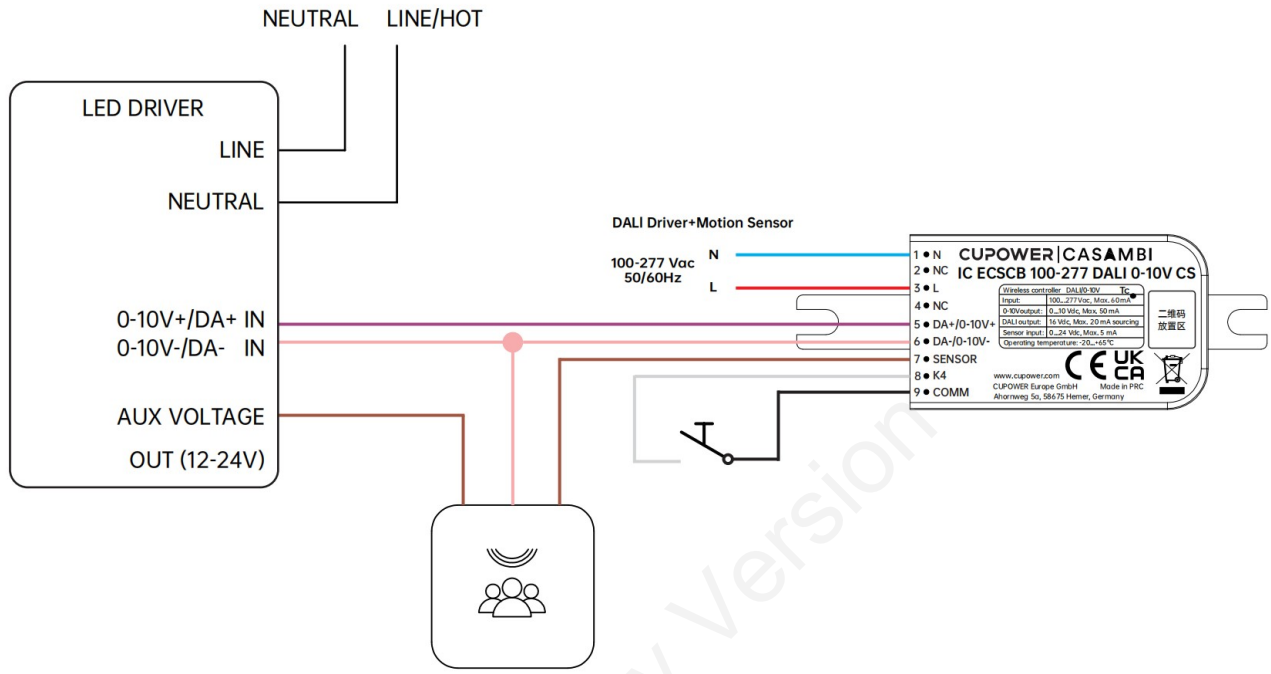

Preliminary Version

Hunan Xiezhen Electronics Co., Ltd.
Block A&B, Building 11, Innovation Park Linyi Road,
BailLutang Town Suxian District, Chenzhou, Hunan - China

CUPOWER Europe GmbH
Ahornweg 5a
58675 Hemer – Germany

version: 20250318

Errors excepted. We reserve the right to make alterations in the interest of improving our products.