POWER SOURCE

3 Pin US Power cord to C13 IEC 0.5m

PLAC-3PUSA-C13IEC-500

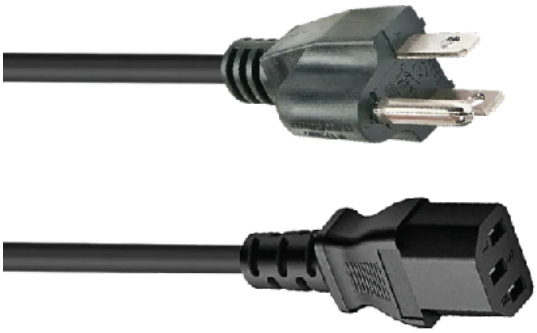

Features:

- AC Input Range: 220~250V
- Conductor size : 0.75mm²
- Outside Diameter : 6.55mm±0.2mm
- Withstand voltage : 2.0KV/1MIN
- ETL Approved
- Black power cord
- US Mains plug to IEC-C13
- 0.5m in length
- 1 year warranty

Mechanical Specifications

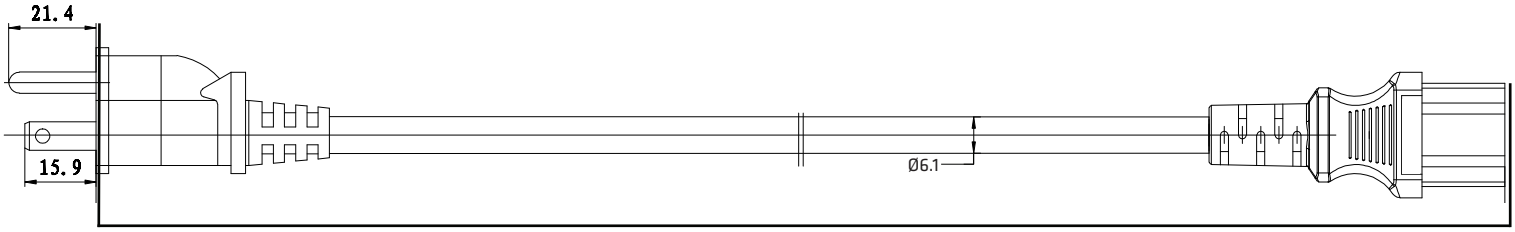

500±20mm

Connector A

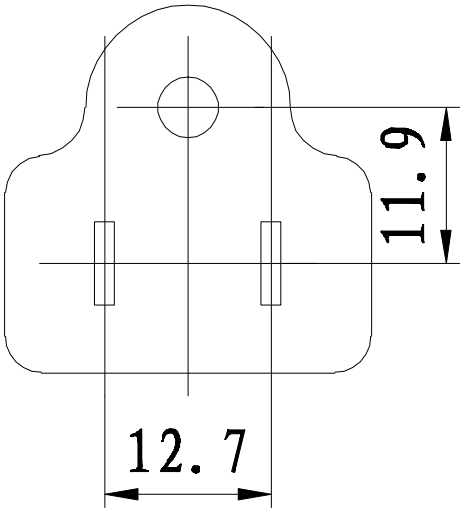

Connector B

