SUNRICHER

Multi Colour DT6 Converter with PWM Output

SR-2304BEA

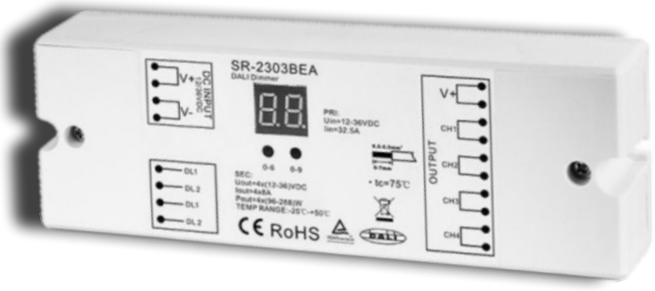

Features:

- Constant Voltage PWM Output
- Push Dimming (VAC)
- DC Input/Output: 12~48VDC
- DALI-2 DT6 Compatible
- Individual colour control : RGBW, CCT
- Single Control: 4 individual DALI address
- 2 year warranty

IP20 SELV

Model		SR-2303BEA
Product Data	Input Voltage	12~48VDC
	Output Current	4x8A
	Output Power	4x(96-288)W
	Input Voltage Range	12-48VDC
	Current	32.5A
	Input Voltage Range	12-36VDC
Environment	Working TEMP.	-20ºC - +50ºC
	Ingress Protection Rating	IP20
Others	Net. Weight	0.22kg
	Size	170*59*29mm (L*W*D)
Safety & Warnings	• DO NOT Install with power applied to the device • DO NOT expose the device to moisture	
Notes	• 4 Assignable Address by the DALI master. • Can be used for RGBW or CCT or Individual single colour strips. • DALI address can be assigned either by the Master or from the device itself. • Manual /automatically DALI address setting	• DALI address digital indicate • Push dimmer/DALI dimmer optional • Four channels, can set addresses from one to four. • To work with power repeater to expand output power unlimitedly

Mechanical Specifications

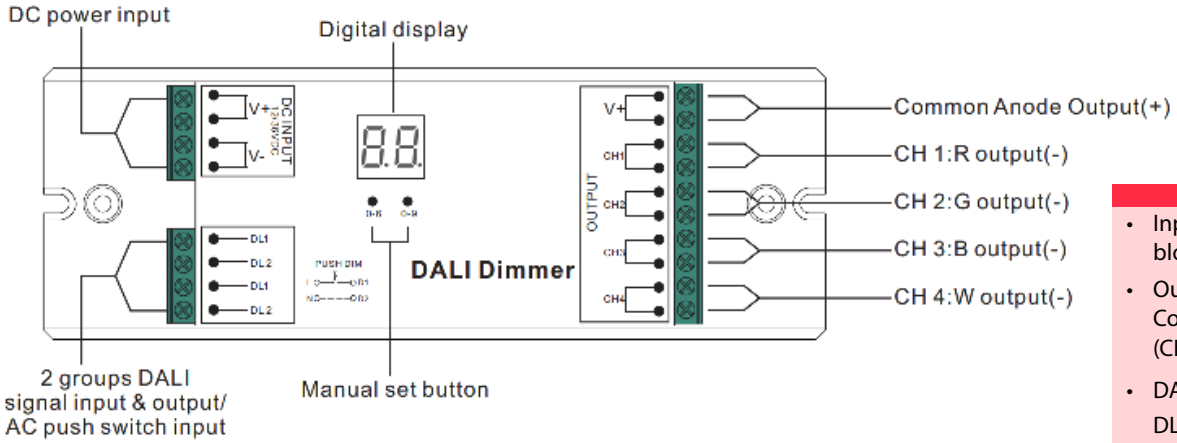

- Input Low voltage: 4 pole terminal block: Positive (V+), Negative (V-).
- Output LED's: 10 pole terminal block: 2 Common Positive (V+), 8 Negative (CH#-).
- DALI. Terminals 4P: 2 DALI lines DL1-DL2.
- Push Dim . Terminals 4P:Use DL1 and DL2•

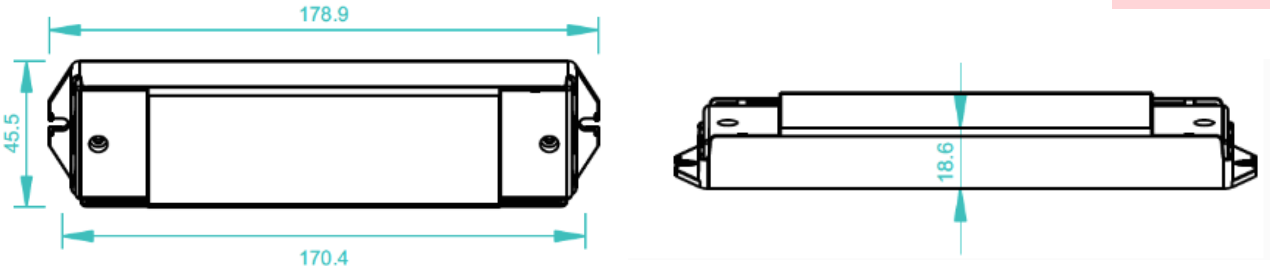

ADM Systems Pty Ltd E sales@admtech.com.au T 1300 236 467

Operation

This product can be operated under DALI Dimmer mode and Push Dimmer mode while connected with DALI master controllers and push switches respectively.

1. Switching of Two Modes

DALI and Push DIM functions cannot be used simultaneously, which can be controlled respectively by DALI master controllers and push switches.



Set DALI Address Manually Via Buttons



1.1. Press and hold down any of the two buttons until numeric digital display flashes, then release the button.
1.2. Click any of the two buttons once to select a digit, click again to change the digit until the desired DALI address appears. Click first button to set "tens" position and second button to set "units" position. The address can be set from 00~63.
1.3. Then press and hold down any of the 2 buttons until the numeric digital display stops flashing to confirm the setting.

Note: DALI address can be manually assigned from 00-63-FF, by factory defaults, no DALI address is assigned for the dimmer, and the display shows FF . Setting DALI address as FF will reset the dimmer to factory defaults.

2. Set DALI Address Quantity





2.1. Press and hold down both of the two buttons until numeric digital display flashes, then release the button.
2.2. Click first button to select "1A", "2A", "3A" or "4A" which means 1 address, 2 addresses, 3 addresses or 4 addresses.
2.3. Then press and hold down any of the 2 buttons until the numeric digital display stops flashing to con firm the setting.

For example, when we set address to 22:
When select 1A, all four channels will be the same address 22.
When select 2A, channel 1 & 3 will be the same address 22, channel 2 & 4 will be the same address 23.
When select 3A, channel 1, 2, 3 will be address 22, 23, 24 respectively, and channel 4 address is also 24.
When select 4A, channel 1, 2, 3, 4 will be address 22, 23, 24, 25 respectively.

3. DALI Address Assigned by DALI Masters

DALI address can also be assigned by DALI Master controller automatically, please refer to user manuals of compatible DALI Masters for specific operations.
Note: The digital display will show AU when the DALI master is assigning addresses.

4. Push Dimmer Mode

While connected with a AC push switch, the digital display will show "PD" which means Push Dimmer Mode, operations under Push Dimmer Mode are as follows:
4.1. Click the button to switch ON/OFF
4.2. Press and hold down the button to increase or decrease light intensity to desired level and release it, then repeat the operation to adjust light intensity to opposite direction. The dimming range is from 1% to 100%.
4.2. Memory function after power off or power failure enables the device to memorize the status before power off while power on again.

Wiring Diagram

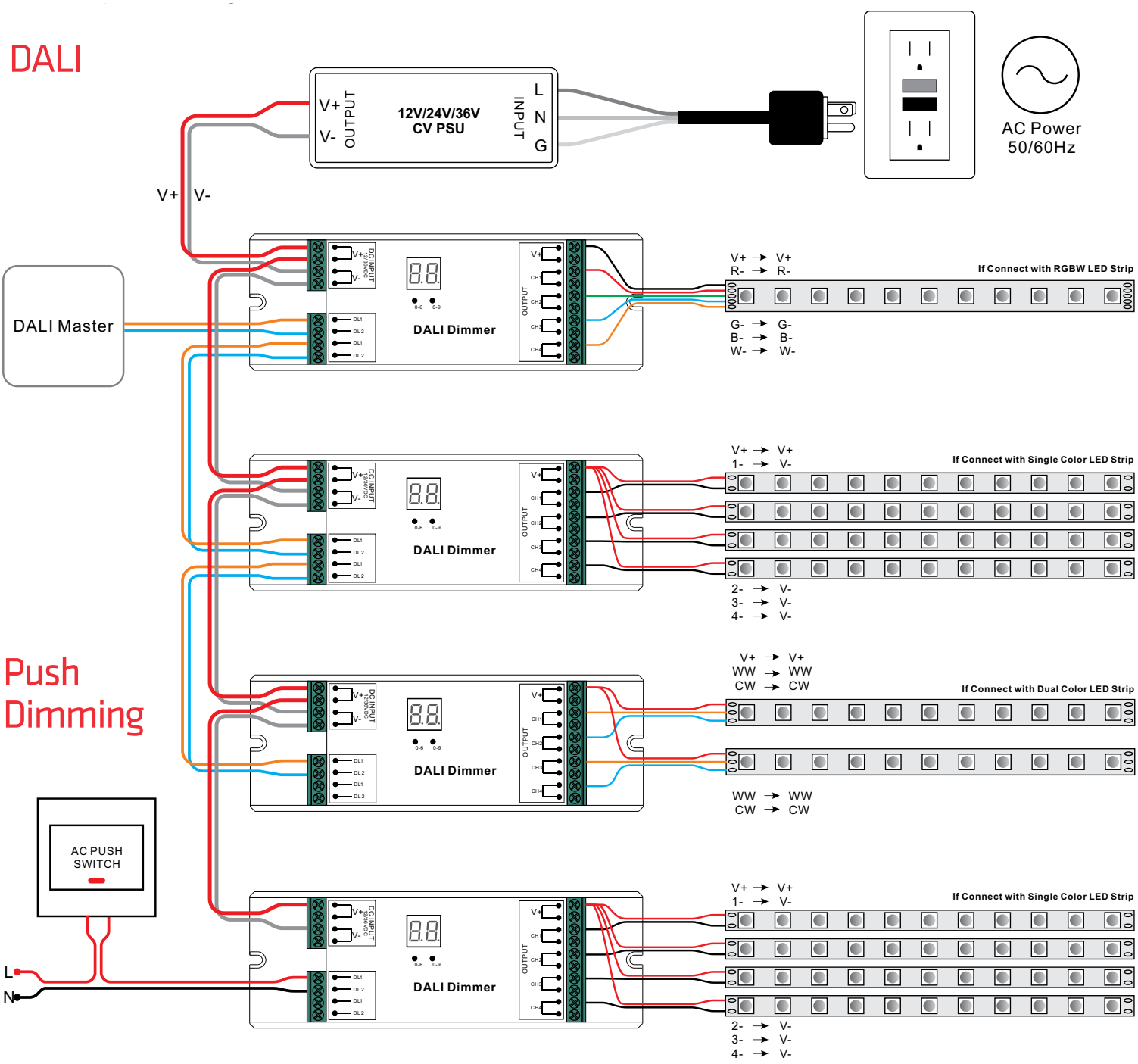

- Ensure Input Voltage matches LED required voltage.