Operation

1. Select a DALI Device Type



1.1. Press and hold down both buttons until digital display flashes, then release the button.

1.2. Keep clicking the 2nd button, you will get the 8 device types one by one as follows:

7.c , means 2 Tc color type devices integrated in one control gear, which can control 2 groups of tunable white LED separately using 2 DALI addresses under this mode.

H.c , means XY & Tc color type devices integrated in one control gear, which can control RGB & CCT LED separately using 2 DALI addresses under this mode.

r.c , means RGBWAF & Tc color type devices integrated in one control gear, which can control RGB & CCT LED separately using 2 DALI addresses under this mode.

H.6 , means XY & DT6 type devices integrated in one control gear, which can control RGB & W LED separately using 2 DALI addresses under this mode.

H.4 , means XY coordinate color type, which can control RGB LED using 1 DALI address under this mode.

7.c , means Tc color type, which can control tunable white LED using 1 DALI address under this mode.

r.9 , means RGBWAF color type, the device can control RGB+CCT LED using 1 DALI address under this mode.

7.6 , means DT6 device type, which can control single color LED using 1 DALI address under this mode.

1.3. Select a device type you would like and then press and hold down both buttons until digital display stops flashing to confirm the selection.

2. Setting DALI address



2.1. Press and hold down the first button on the left until digital display flashes, then release the button.

2.2. Click any of the two buttons once to select a digit, click again to change the digit until the desired DALI address appears. Click first button to set “tens” position and second button to set “units” position. The address can be set from 00~63.

2.3. Then press and hold down any of the 2 buttons until the numeric digital display stops flashing to confirm the setting.

Note: DALI address can be manually assigned from 00-63-FF, by factory defaults, no DALI address is assigned for the dimmer, and the display shows FF. Setting DALI address as FF will reset the dimmer to factory defaults.

Once an address is selected, depending on the device type selected, the control gear may occupies 2 consecutive addresses or 1 address. For example, if the control gear is addressed to 22 on the display, when the device type is multi-addresses type, the control gear occupies address 22 & 23, when the device type is single-address type, the control gear occupies address 22.

3. Setting the Number of Output Channel



3.1 Under r.9 mode, press and hold down the second button until digital display flashes, then release the button.

3.2 Click the first button to switch between 3A, 4A, and 5A. 3A means controlling three output channels RGB, 4A means controlling four output channels RGBW. 5A means controlling five output channels RGBCCT.

3.3 Then press and hold down the second button to confirm the setting.

4. DALI Address Assigned by DALI Masters

DALI address can also be assigned by DALI Master controller automatically, please refer to user manuals of compatible DALI Masters for specific operations.

Note: The digital display will show AU When the DALI master is assigning addresses. When the device type is multi-addresses type, the control gear will be discovered as 2 separate devices.

5. Push Dimmer Mode

While connected with an AC push switch, the digital display will show “PD” which means Push Dimmer Mode, operations under Push Dimmer Mode are as follows:

While 7.c device type is selected, only the 1st group tunable white LED will be controlled by the push switch,
- Click the button to switch ON/OFF
- Press and hold down the button to increase or decrease light intensity to desired level and release it, then repeat the operation to adjust light intensity to opposite direction. The dimming range is from 1% to 100%.
- Double click the button to switch between brightness mode and color temperature mode.
- Press and hold down the button to change color temperature under color temperature mode.

While H.c or r.c or H.6 device type is selected, only the RGB LED will be controlled by the push switch,
- Click the button to switch ON/OFF
- Press and hold down the button to increase or decrease light intensity to desired level and release it, then repeat the operation to adjust light intensity to opposite direction. The dimming range is from 1% to 100%.
- Double click the button to switch between brightness mode and RGB color mode.
- Press and hold down the button to change RGB colors under RGB color mode.

While H.4 or r.9 device type is selected, RGB LED will be controlled by the push switch,
- Click the button to switch ON/OFF
- Press and hold down the button to increase or decrease light intensity to desired level and release it, then repeat the operation to adjust light intensity to opposite direction. The dimming range is from 1% to 100%.
- Double click the button to switch between brightness mode and RGB color mode.
- Press and hold down the button to change RGB colors under RGB color mode.

While 7.c device type is selected, tunable white LED will be controlled by the push switch,
- Click the button to switch ON/OFF
- Press and hold down the button to increase or decrease light intensity to desired level and release it, then repeat the operation to adjust light intensity to opposite direction. The dimming range is from 1% to 100%.
- Double click the button to switch between brightness mode and color temperature mode.
- Press and hold down the button to change color temperature under color temperature mode.

While 7.6 device type is selected, single color LED will be controlled by the push switch,
- Click the button to switch ON/OFF
- Press and hold down the button to increase or decrease light intensity to desired level and release it, then repeat the operation to adjust light intensity to opposite direction. The dimming range is from 1% to 100%.

Memory function after power off or power failure enables the device to memorize the status before power off while power on again.

SUNRICHER

Multi colour DALI2 DT8 LED with PWM Output

SR-2309PRO-5C

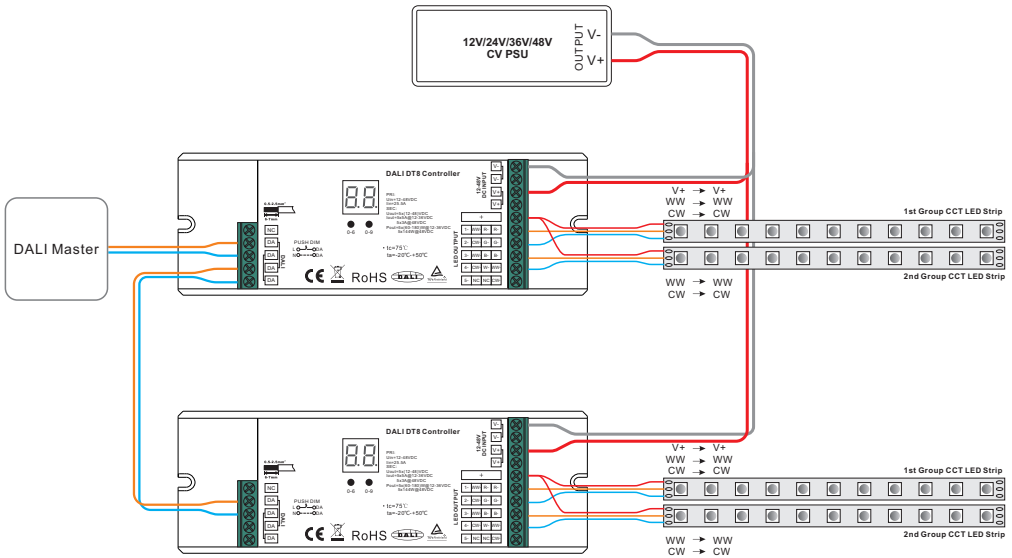

Note: 1) Please make sure that the DALI master controller supports Tc color type commands.
2) The control gear will be discovered by master controller as 2 separate Tc devices.

1.2 When Hc multi-addresses XY+Tc device type selected

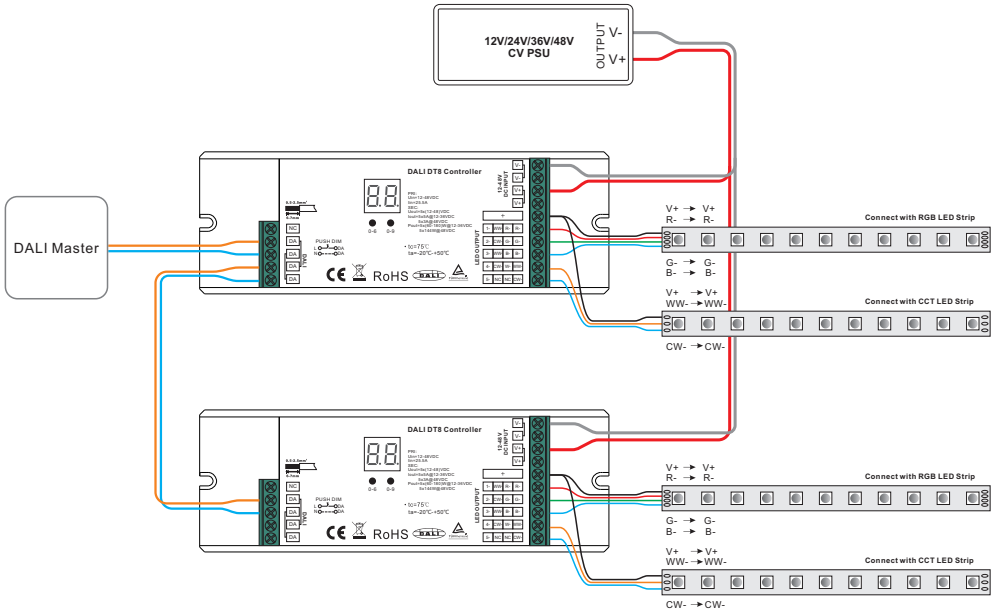

Note: 1) Please make sure that the DALI master controller supports XY & Tc color type commands.
2) The control gear will be discovered by master controller as 2 separate devices: XY, Tc.

1.3 When rC multi-addresses RGB+Tc device type selected

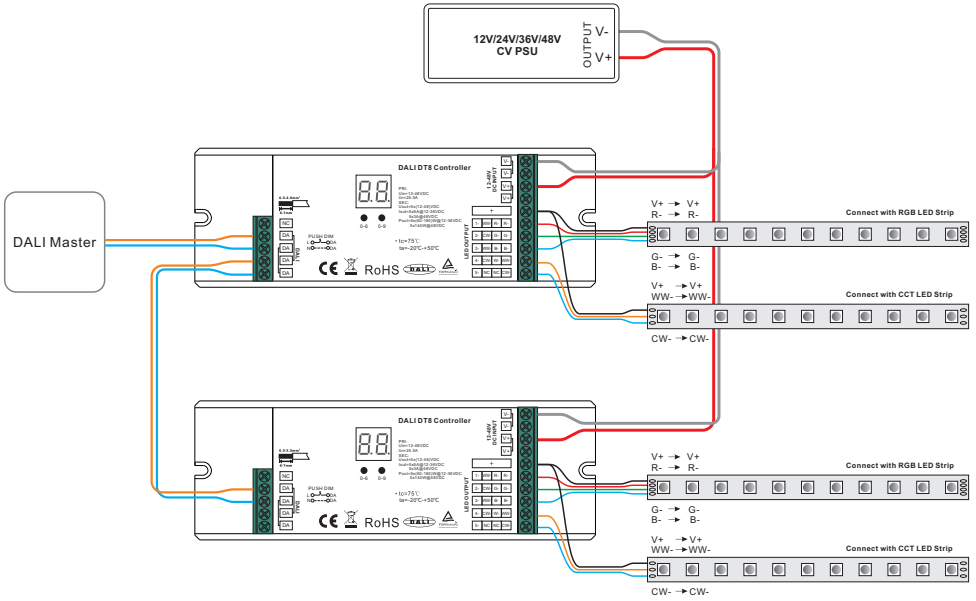

Note: 1) Make sure that the DALI master controller supports RGBWAF & Tc color type commands.
2) The control gear will be discovered by master controller as 2 separate devices: RGB, Tc.

1.4 When H6 multi-addresses XY+Single Color(DT6) device type selected

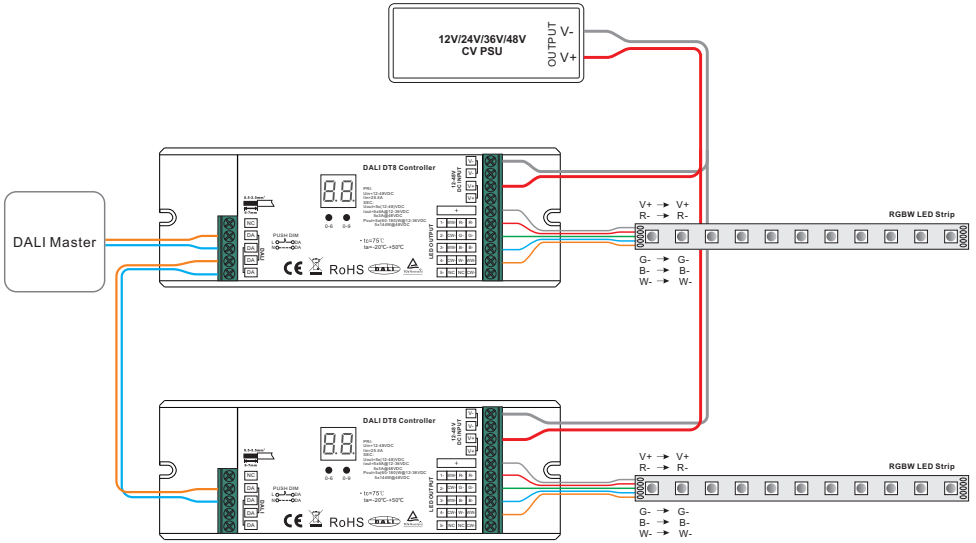

Note: 1) Please make sure that the DALI master controller supports XY & DT6 color type commands.
2) The control gear will be discovered by master controller as 2 separate devices: XY, DT6

1.5 When H4 single-address XY device type selected

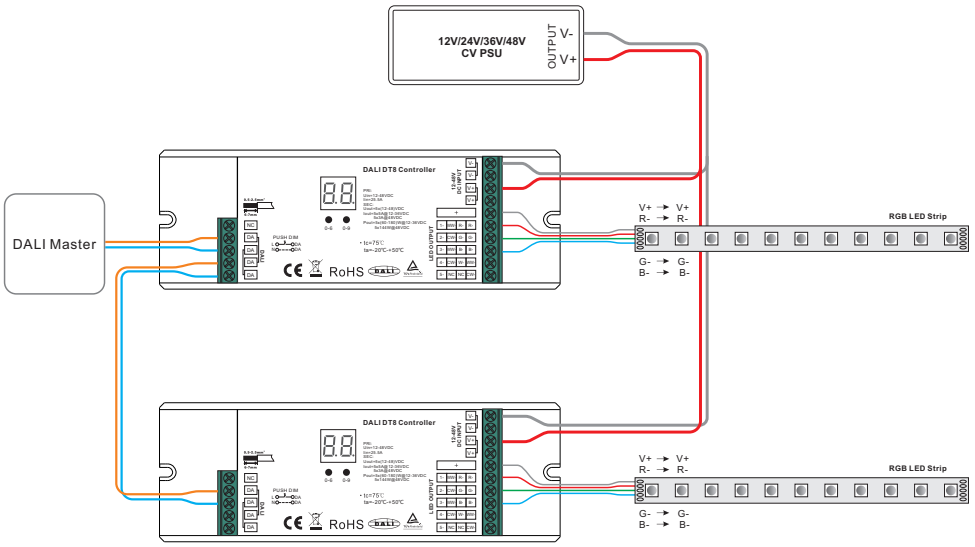

Note: Please make sure that the DALI master controller supports XY color type commands.

1.6 When Tc single-address Tc device type selected

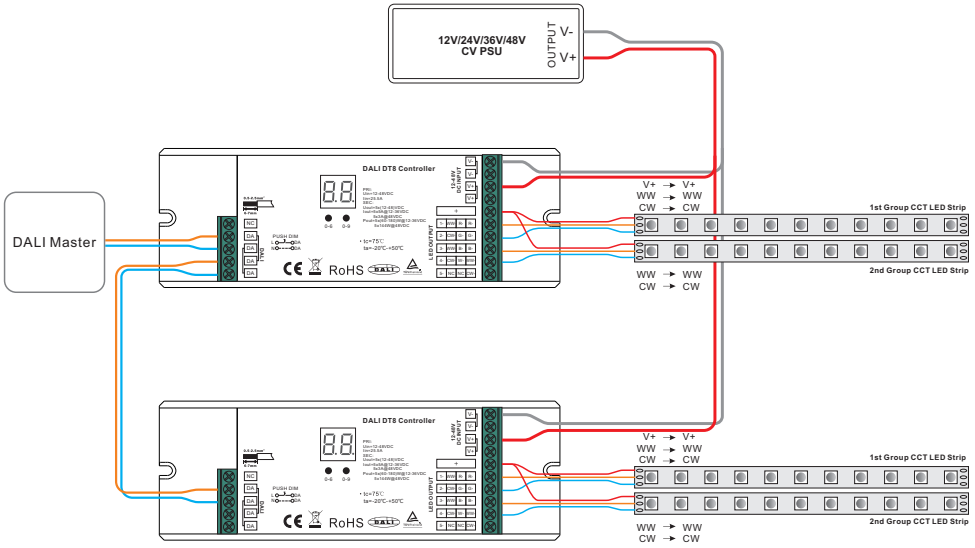

Note: 1) Please make sure that the DALI master controller supports Tc color type commands.
2) 2 groups CCT LED are controlled together.

1.7 When r9 single-address RGBWAF device type selected

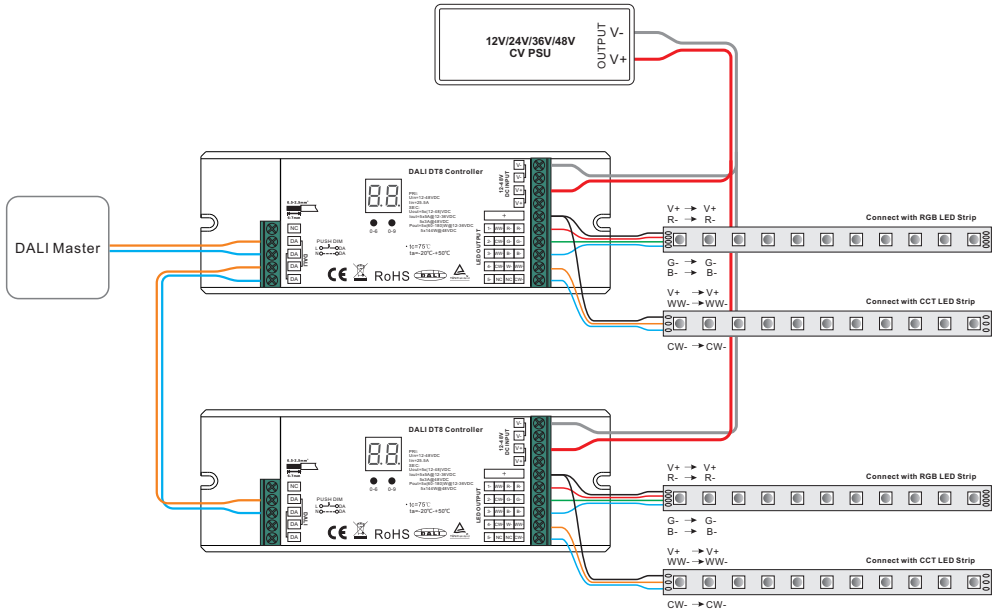

Note: Please make sure that the DALI master controller supports RGBWAF color type commands.

1.8 When d6 single-address DT6 device type selected

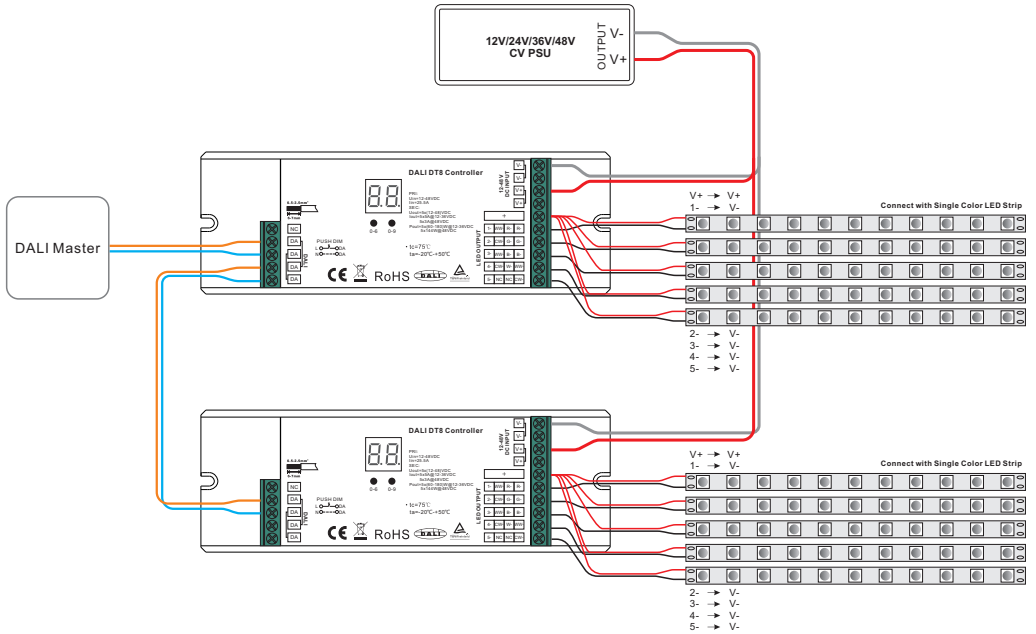

Note: The control gear will be discovered by DALI master as a DT6 device, 5 channels controlled together.

2. With Push Switch

2.1 When 7C multi-addresses Tc device type selected

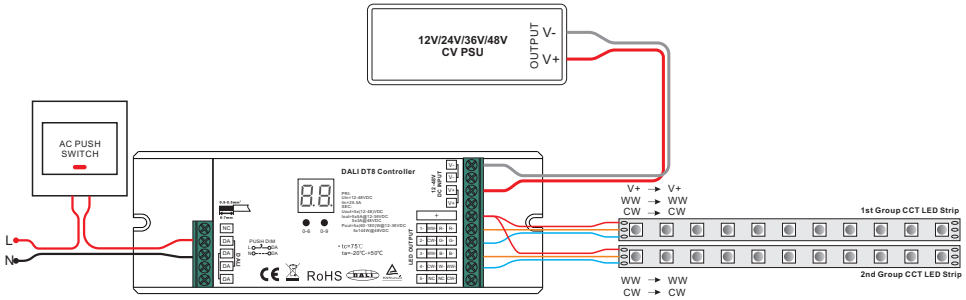

Note: only the 1st group CCT LED can be controlled under this mode.

2.2 When H.C multi-addresses XY+Tc device type selected

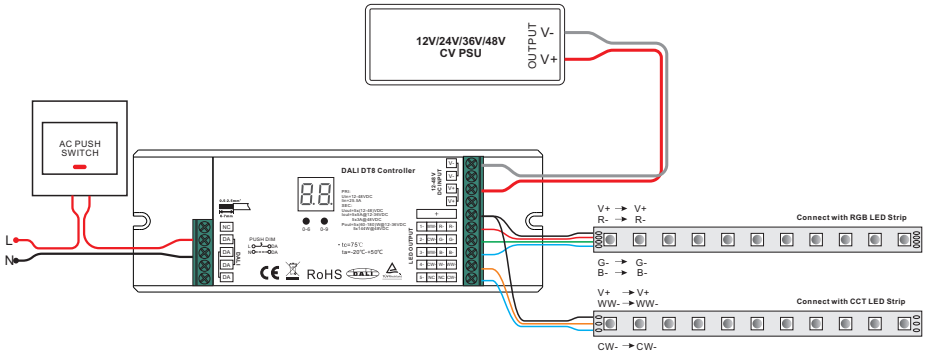

Note: only the RGB LED can be controlled under this mode.

2.3 When r.C multi-addresses RGB+Tc device type selected

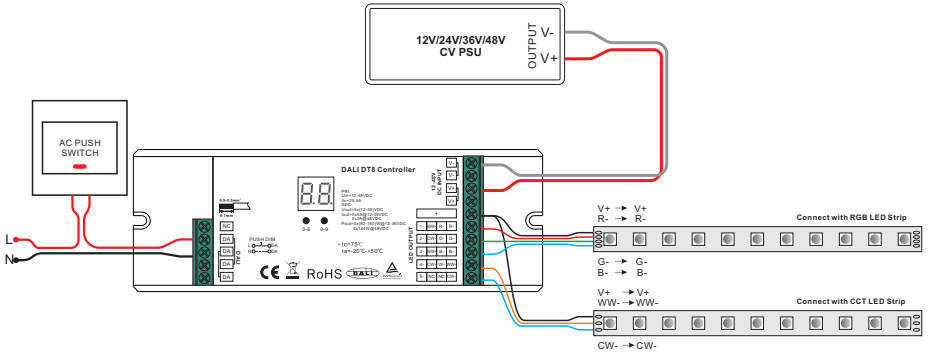

2.4 When H.6 multi-addresses XY+Single Color(DT6) device type selected

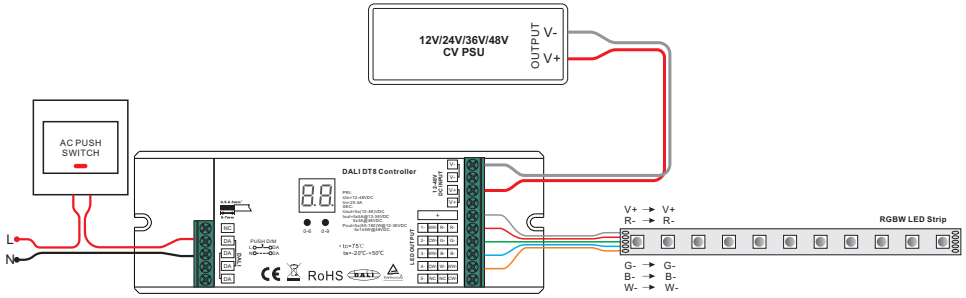

Note: only the RGB LED can be controlled under this mode.

2.5 When H4 single-address XY device type selected

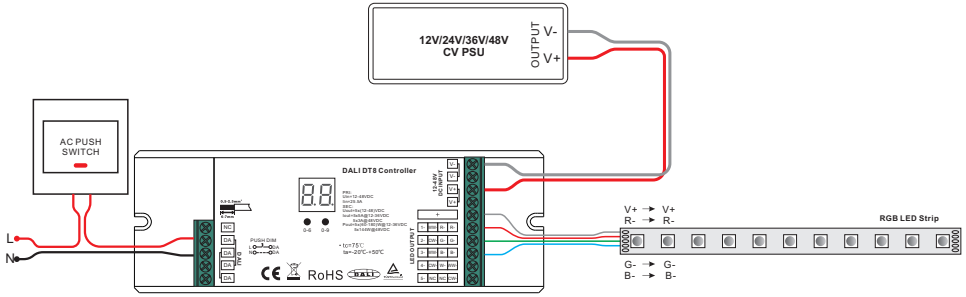

2.6 When 7C single-address Tc device type selected

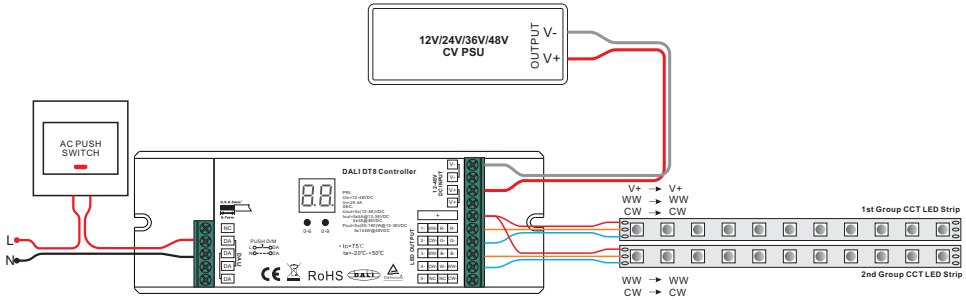

Note: 2 groups CCT LED are controlled together under this mode.

2.7 When r 9 single-address RGBWAF device type selected

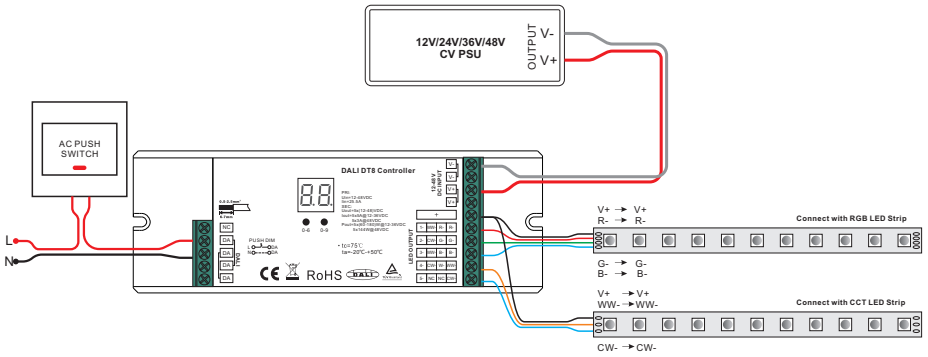

Note: brightness of both RGB & CCT LEDs can be controlled, color control only applicable to RGB LED under this mode.

2.8 When r6 single-address DT6 device type selected

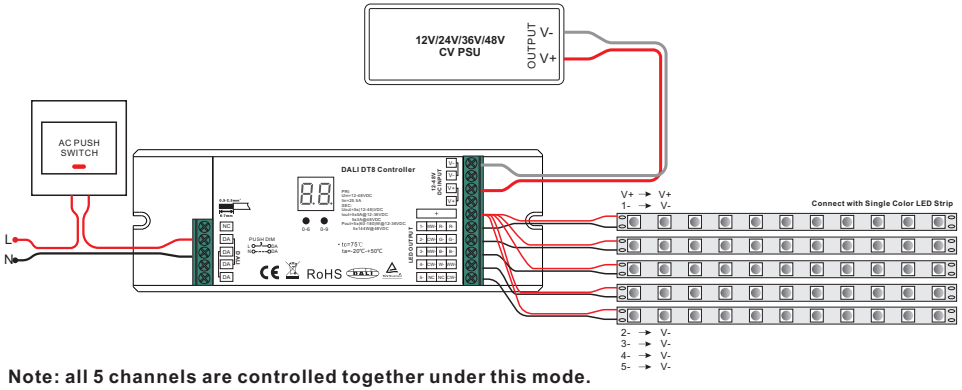

Note: all 5 channels are controlled together under this mode.

When total load of each receiver is over 20A

1. With DALI Master

1.1 When Tc multi-addresses Tc device type selected

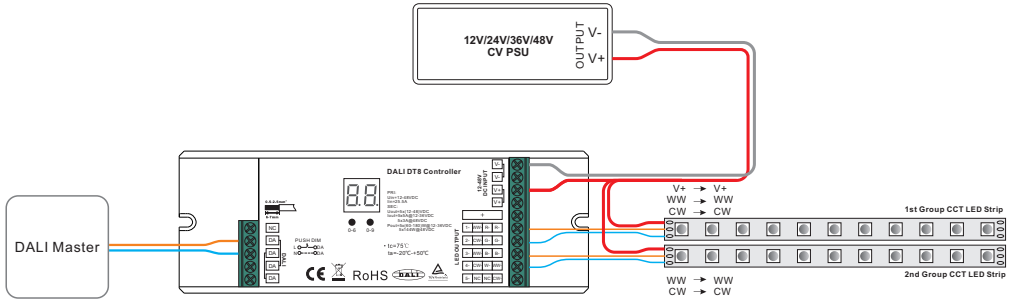

Note: 1) Please make sure that the DALI master controller supports Tc color type commands.
2) The control gear will be discovered by master controller as 2 separate Tc devices.

1.2 When Hc multi-addresses XY+Tc device type selected

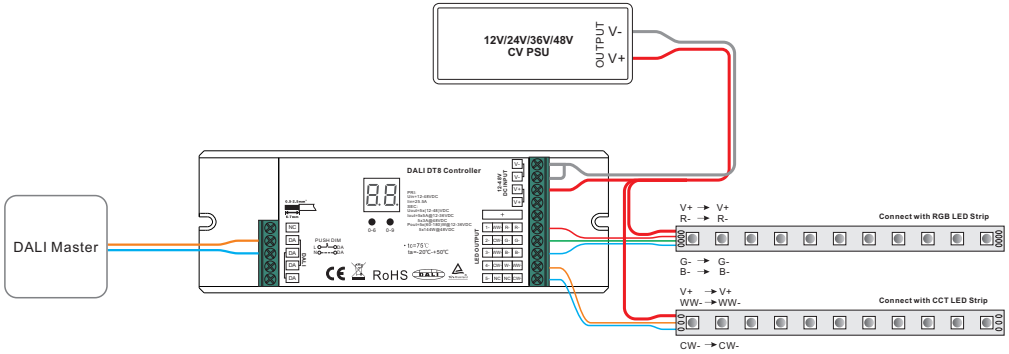

Note: 1) Please make sure that the DALI master controller supports XY & Tc color type commands.
2) The control gear will be discovered by master controller as 2 separate devices: XY, Tc.

1.3 When rC multi-addresses RGB+Tc device type selected

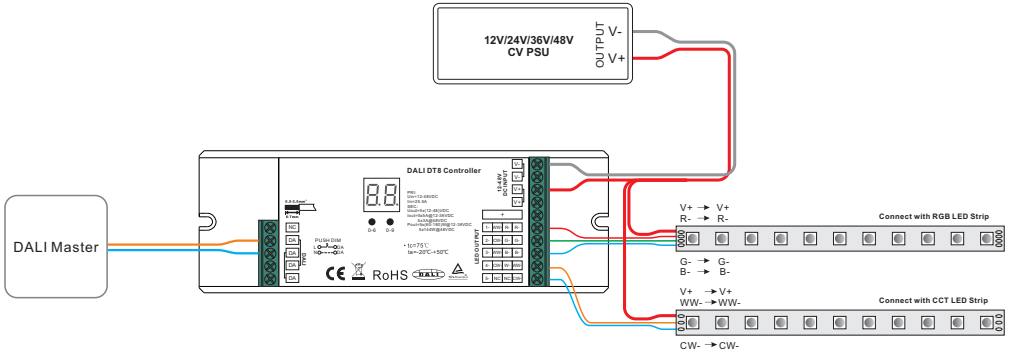

Note: 1) Make sure that the DALI master controller supports RGBWAF & Tc color type commands.
2) The control gear will be discovered by master controller as 2 separate devices: RGB, Tc.

1.4 When H6 multi-addresses XY+Single Color(DT6) device type selected

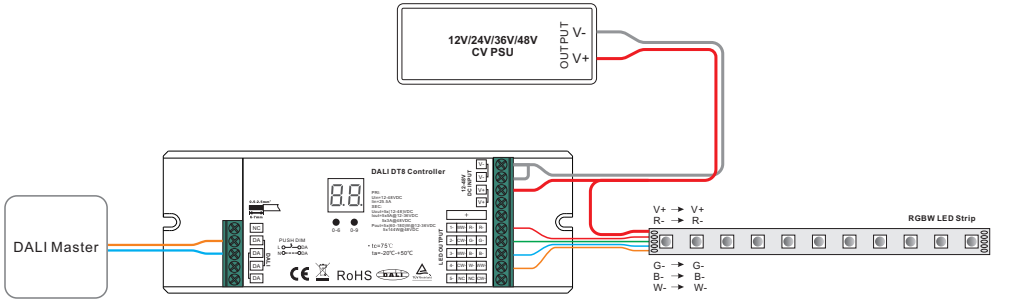

Note: 1) Please make sure that the DALI master controller supports XY & DT6 color type commands.
2) The control gear will be discovered by master controller as 2 separate devices: XY, DT6

1.5 When H4 single-address XY device type selected

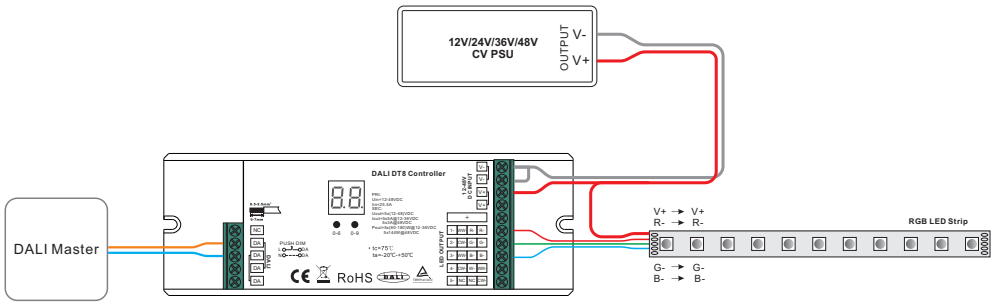

Note: Please make sure that the DALI master controller supports XY color type commands.

1.6 When 7C single-address Tc device type selected

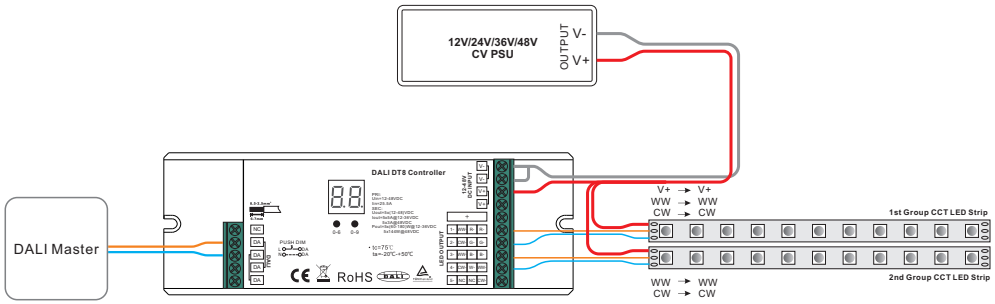

Note: 1) Please make sure that the DALI master controller supports Tc color type commands.
2) 2 groups CCT LED are controlled together.

1.7 When r9 single-address RGBWAF device type selected

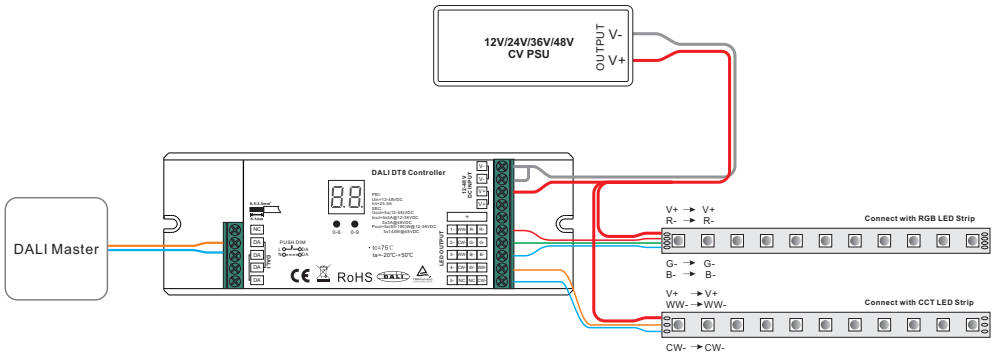

Note: Please make sure that the DALI master controller supports RGBWAF color type commands.

1.8 When r6 single-address DT6 device type selected

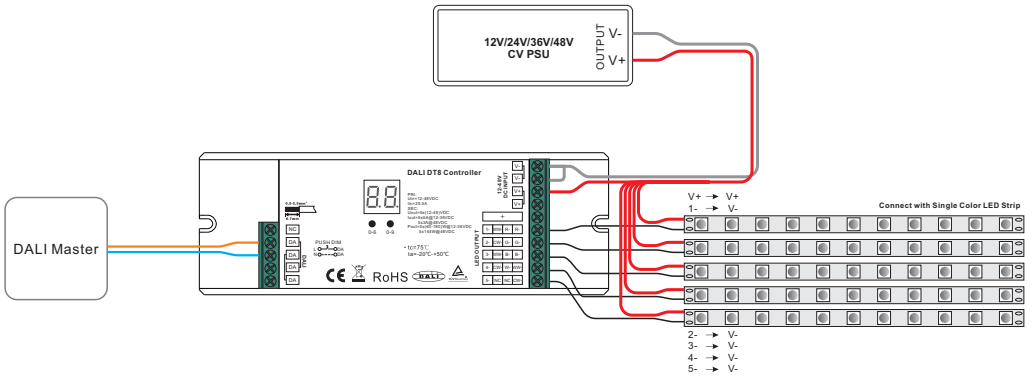

Note: The control gear will be discovered by DALI master as a DT6 device, 5 channels controlled together.

2. With Push Switch

2.1 When 7C multi-addresses Tc device type selected

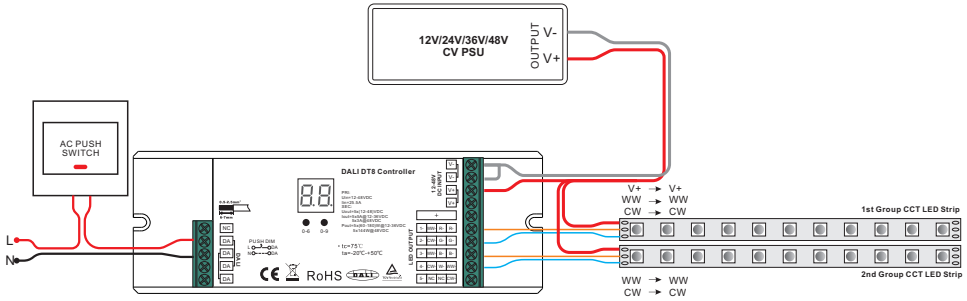

Note: only the 1st group CCT LED can be controlled under this mode.

2.2 When HC multi-addresses XY+Tc device type selected

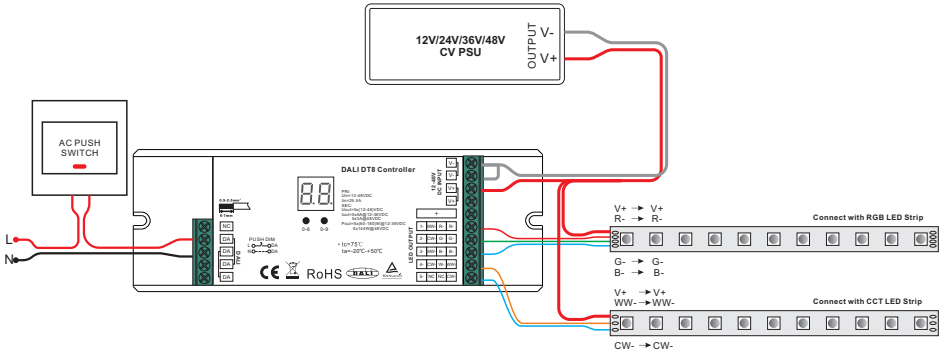

Note: only the RGB LED can be controlled under this mode.

2.3 When r.C multi-addresses RGB+Tc device type selected

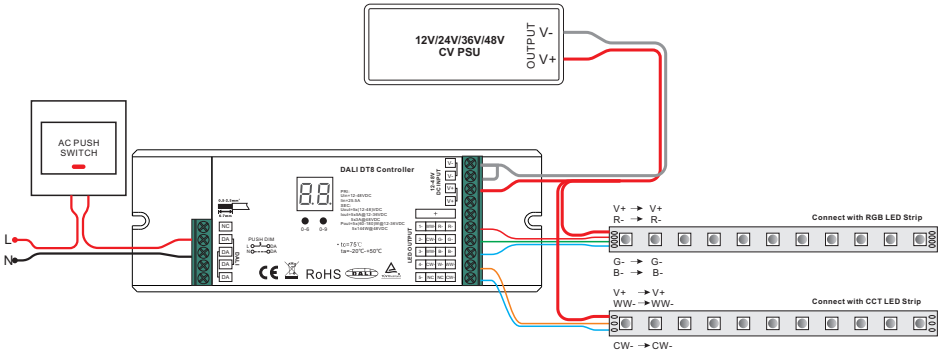

Note: only the RGB LED can be controlled under this mode.

2.4 When H6 multi-addresses XY+Single Color(DT6) device type selected

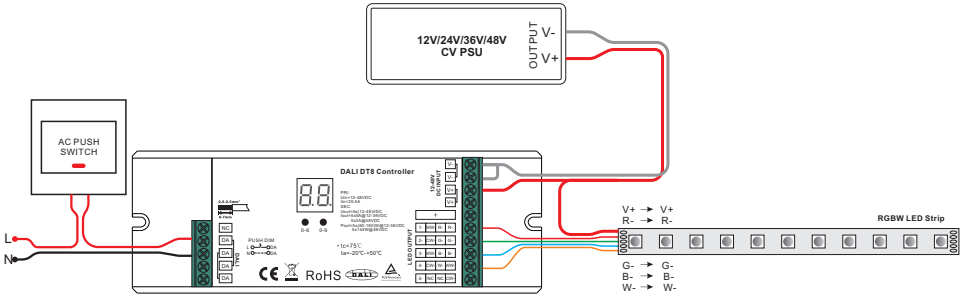

Note: only the RGB LED can be controlled under this mode.

2.5 When H4 single-address XY device type selected

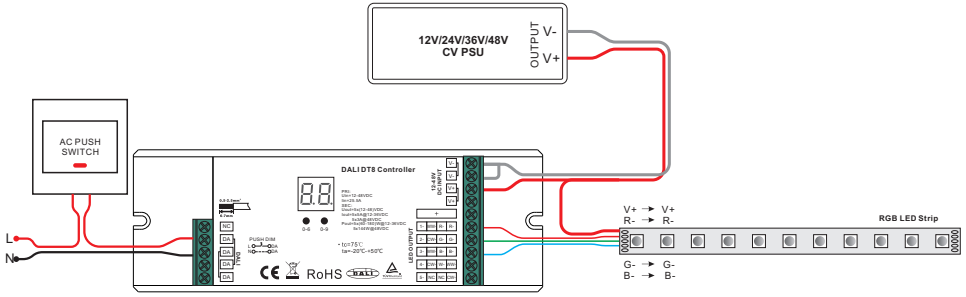

2.6 When 1C single-address Tc device type selected

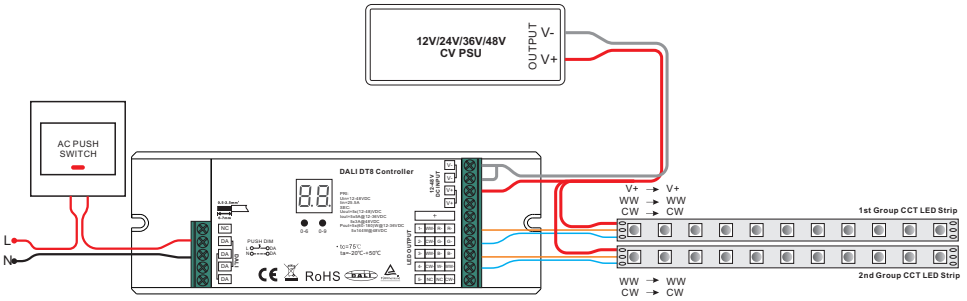

Note: 2 groups CCT LED are controlled together under this mode.

2.7 When r 9 single-address RGBWAF device type selected

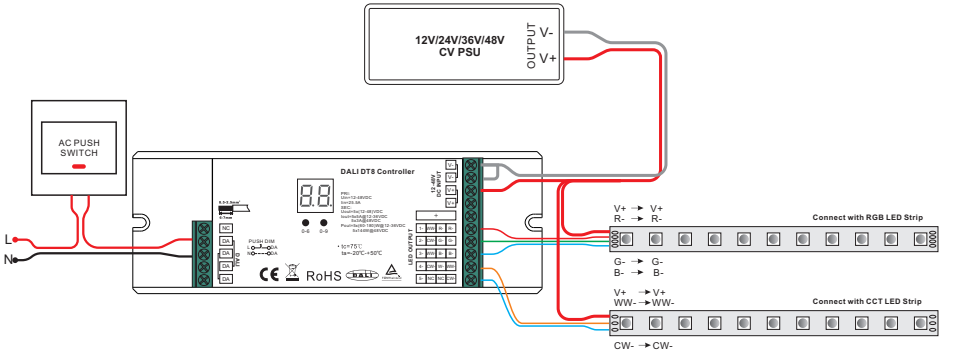

Note: brightness of both RGB & CCT LEDs can be controlled, color control only applicable to RGB LE under this mode.

2.8 When 16 single-address DT6 device type selected

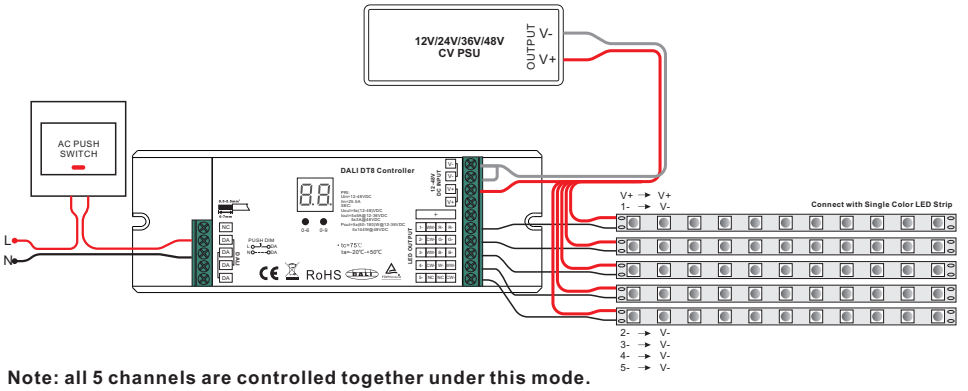

Note: all 5 channels are controlled together under this mode.