SUNRICHER

AC Triac DMX512 Dimmer

SR-2102AC



Features:

- Input: 100-240VAC
- DMX512 Dimmer
- Triac dimmable
- IP20 design for indoor installation
- 5-year warranty

Model		SR-2102AC
Product Data	Input Voltage Range	100-240VAC
	Output Voltage Range	2x(100-240VAC)
	Rated power	2x(120-288)W
	Remarks	DMX512 Dimmer
	Working TEMP.	-20°C - +50°C
	Ingress Protection rating	IP20
	Net. weight	0.2kg
	Size	170*59*29 (L*W*H)
Safety & Warnings	• The product shall be installed and serviced by a qualified person. • DO NOT expose the device to moisture. • IP20. Avoid sun and rain. When installed outdoors, please ensure it is mounted in a waterproof enclosure. • Always be sure to mount this unit in an area with proper ventilation to avoid overheating. • Please check if the output voltage of any LED power supplies used complies with the working voltage of the product. • Never connect or disconnect any cables while power is on and always assure correct connections to avoid short circuits before switching on. • Please ensure that the cable is secured tightly in the connector. • Specifications are subject to change without prior notice. Contact ADM Systems to confirm any critical parameters.	

Mechanical Specifications

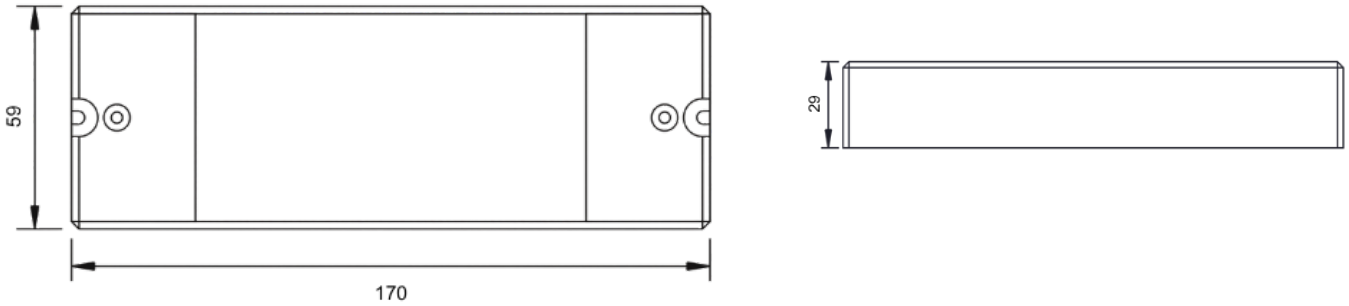

Wiring Diagram

- With Dimmable LED Light

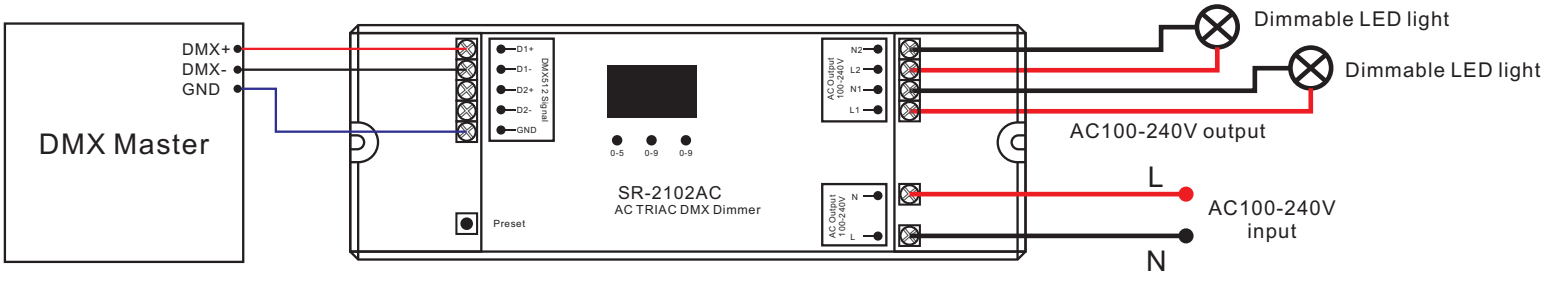

Wiring Diagram

- With Dimmable LED driver

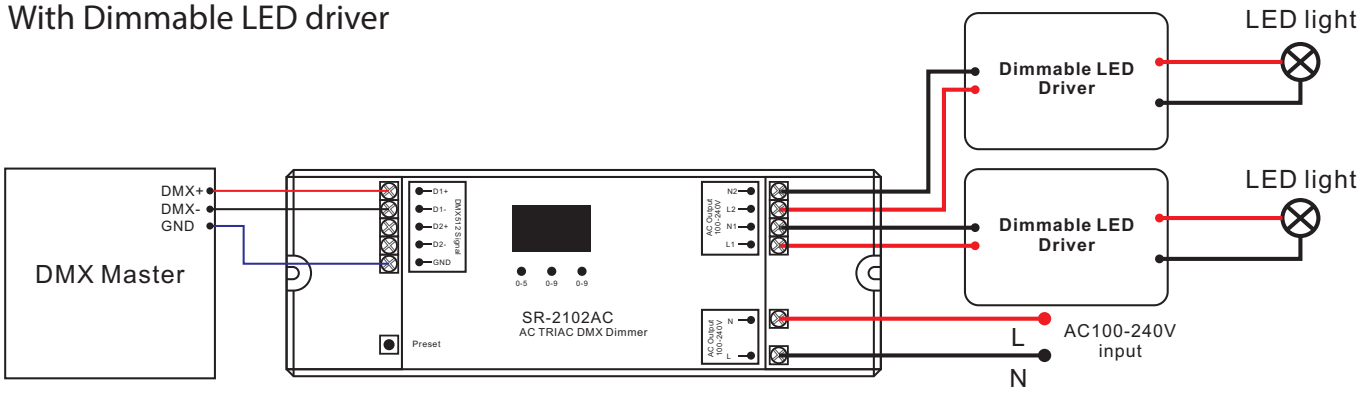

Operation

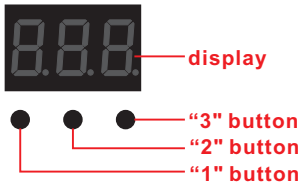

After the device correctly connected and power on.You can do below settings:

1. **How to set its DMX512 decoder address:**
   Hold any one of the three buttons (for example button 1) until the display flashes,then press button 1, 2, 3 to set the DMX512 address, then hold any one of the buttons until the flashing stops to confirm the address
2. **How to set DMX channel:**
   Hold button 2 & 3 together until the display "cH" flashes, then press button 1 to choose 1cH or 2cH or 3cH output, then hold any one of the buttons to confirm it.1 cH=1 DMX address for all outputs, 2cH=2 DMX addresses for all outputs After the device correctly connected and power on. You can do below settings:the factory defaults is 2cH for 2 outputs.
3. **Choose dimming way:**
   Hold button 1 and 3 simultaneously until the display flashes, then press button 2 to select or, then hold any one button to confirm.

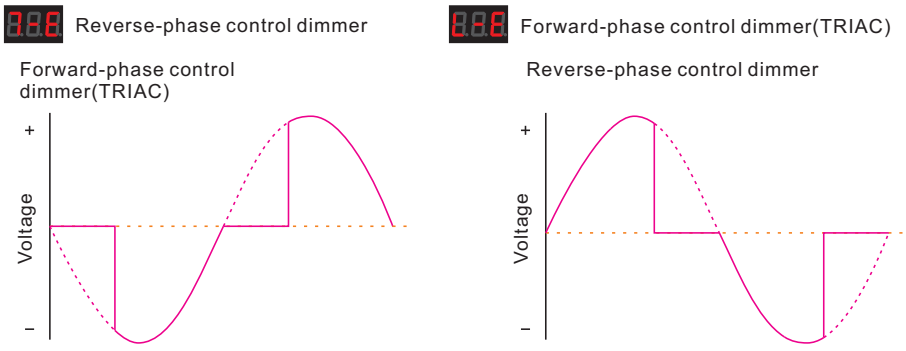

4. **Set the minimum dimming brightness point.**
   The factory dimming range is 0%~100%, but the 0% can be can be re-set as below:
   Operate the DMX master to dim the light to any brightness you want, then press the Preset button ● the light flashes, means the minimum point is set at this brightness now. You can not dim lower than this brightness point. The minimum point will be covered by repeating doing that.
   How to reset it to factory defaults: dim up light to 100% , then press Preset button until flash.