SUNRICHER

PIR Motion Sensor LED Switch

SR-8004DC



CE IP20 RoHS COMPLIANT

Features:

- 12-36V DC Version
- 3-20m detection range
- Motion ON/OFF detector
- 120 degrees sense angle
- IP20 design for indoor installation
- 5-year warranty

Model		SR-8004DC
Product Data	Input Voltage Range	12-36VDC
	Output Voltage Range	12-36VDC
	Rated current	1x8A
	Rated power	1x(96-288)W
	Remarks	Detect human movement to turn ON/OFF
	Working TEMP.	-20°C - +50°C
	Ingress Protection rating	IP20
	Net. weight	0.1kg
	Size	95*37*20 (L*W*H)
Safety & Warnings	• The product shall be installed and serviced by a qualified person. • DO NOT expose the device to moisture. • IP20. Avoid sun and rain. When installed outdoors, please ensure it is mounted in a waterproof enclosure. • Always be sure to mount this unit in an area with proper ventilation to avoid overheating. • Please check if the output voltage of any LED power supplies used complies with the working voltage of the product. • Never connect or disconnect any cables while power is on and always assure correct connections to avoid short circuits before switching on. • Please ensure that the cable is secured tightly in the connector. • Specifications are subject to change without prior notice. Contact ADM Systems to confirm any critical parameters.	

Mechanical Specifications

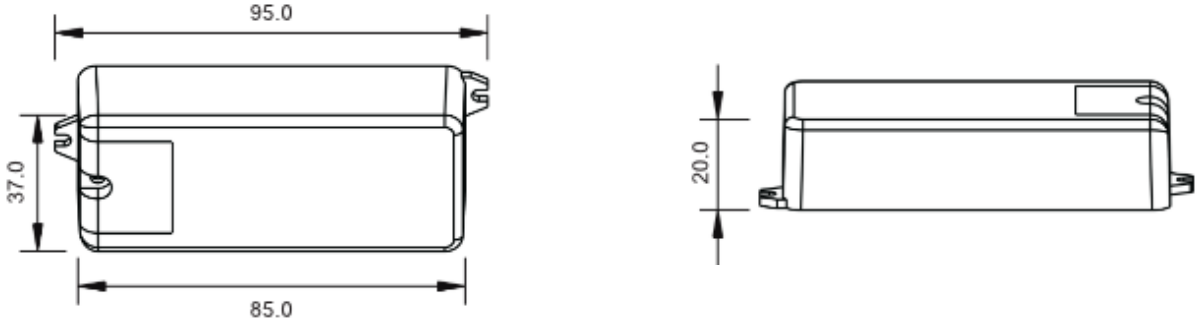

Wiring Diagram

